READING TIP

when browsing through this catalogue it is easier using two-up view

(viewing the left & right side next to each other)!

FOR BEST RESULTS DO NOT PRINT THIS PAGE!

This page will interfere with the correct page order when printing recto-verso.

The illustrations and photo's in our catalogues and on our website are protected.
It is illegal to copy these in any way or by any means.
You are permitted to print the pages for personal use only.

AH SPRITE - MG MIDGET

SPRITE MKI-II - MIDGET MKI • 1958-1964

PARTS & ACCESSORIES CATALOGUE

Third Edition • 190.504

Quality Parts & Service

anglo PARTS

AH SPRITE - MG MIDGET

SPRITE MKI-II - MIDGET MKI • 1958-1964

PARTS & ACCESSORIES CATALOGUE

fill your customer number in for easy ordering

www.angloparts.com

Anglo Parts Shops

MAIN BRANCH BELGIUM
Brusselsesteenweg 245 • B-2800 Mechelen • Tel. +32 15 42 37 83 • Fax +32 15 42 34 45 • sales.belgium@angloparts.com
Open: Monday to Friday: from 9.30 hrs. to 17.30 hrs. • Saturday: from 9.30 hrs. to 16.00 hrs.

HOLLAND
Storkstraat 3 (Industrieterrein De Compagnie) • NL-3905 KX Veenendaal • Tel. +31 318-551334 • Fax +31 318-551395 • sales.veenendaal@angloparts.com
Open: Maandag t/m vrijdag: 9.30 uur - 17.30 uur

ITALY
Via Alessandro Volta 2 • I-31050 Villorba (TV) • Tel. +39 0422 321 500 • Fax +39 0422 321 470 • sales.treviso@angloparts.com
Aperto: lunedì - venerdì: 9.30 alle 12.30 e dalle 14.30 alle 18.00

GERMANY
Ernst Befort Str. 2 • D-35578 Wetzlar • Tel. +49 6441 76081 • Fax +49 6441 781336 • sales.wetzlar@angloparts.com
Geöffnet: Montag bis Freitag: 9.30 Uhr. • 17.30 Uhr. Samstag: geschlossen

Authorized Anglo Parts Dealers

FRANCE Distrib.: Guy Grardel
3 bis, Rue des Ecoles • F-59254 Ghyvelde • Tél. +33 328 26 61 00 • Fax +33 328 26 83 73 • grardel@orange.fr
Ouvert: du lundi au vendredi: de 8.00 h. à 18.00 h. • samedi: de 8.00 h. à 17.00 h.

HOLLAND Distrib.: Niessen Restauratie Center
Orionpoort 1 (Industrieterrein 't Hagelkruis) • NL-5971 LZ Grubbenvorst • Tel. +31 77-3661241 • Fax +31 77-3663411 • niessenrestauratiecenter@hetnet.nl
Open : Maandag t/m vrijdag: 8.30 uur - 17.30 uur • Zaterdag: 9.30 uur - 14.00 uur

SPAIN Distrib.: Auto Storica
Calle Josep Pla, 166 • E-8019 Barcelona • Tel. +34 93 221 90 96 • Fax +34 93 225 27 91 • autostorica@autostorica.net
Horarios: Mañanas: 8h00 a 14h00 • Tardes: 15h30 a 19h00

LUXEMBOURG Distrib.: Motor-Service
Zone Industrielle • L-3378 Livange • Tel. +352 518151-810 • Fax +352 518151-820 • info@motor.lu
Ouvert: du lundi au vendredi: de 7.30 h. à 12.30 h. et 13.00 h. à 17.00 h.

HUNGARY Distrib.: NET-GA Kft
Üllői út 621 • H-1182 Budapest • Tel. +36 30-279-0000 • Fax +36 1-291-2827 • sales.budapest@angloparts.hu
Nyitvatartás: H - P: 09.00 - 17.00

POLAND Distrib.: 4x4 Partner SP. Z.O.O.
ul. Bokserska 47 • 02-690 Warszarwa • Tel. +48 22.857.31.63 • Fax +48 22.857.90.26 • info@4x4partner.pl
otwarte od poniedzialku do piatku od 9.00 do 18.00

SWEDEN Distrib.: British Sports Car Center AB
Värmö 5680, 260 21 Billeberga • Tel: +46-46-70 70 32 • Fax: +46-46-70 98 32 • info@bscc.se
Öppettider: Måndag - fredag 9.00-17.00, samt onsdagar till kl 19.00. Lunch 12.00-13.00. Övriga tider endast efter överenskommelse.

CZECH REPUBLIC Distrib.: Metalkov spol. s r.o.
Čechov 367, 258 01 Vlašim • Tel: + 42(0) 317 847337 • Fax: + 42(0) 317 847338 • angloparts@metalkov.cz
Otevřeno: pondělí až pátek 7.00 - 16.00, sobota 8.30 - 11.30

All Rights reserved. No part of this publication may be reproduced or absorbed in any catalogue or information system by any means, Mechanical, photographic, electronic or otherwise, without prior express written consent of Anglo-Parts n.v.

Third Edition • 190.504 • Updated December 2007 • © Van Gestel B&C 2007

Important information

IMPORTANT POINTS

The general policies of our business are printed on the reverse side of our invoices and are on our web site. Updates are printed in the most recent catalogues and price lists and are updated on the web site. When you order goods from us you agree with our policies and accept them. You are always free to ask for an updated publication. The most recent will succeed all previous. Please read below, the most important points.

OUR SALESMEN

We are not trained automotive technicians and can not be held responsible for errors we say or write, we are enthusiasts who like to help. For technical information, we recommend you use the books listed in this catalogue.

OUR CATALOGUES/WEBSITE

We have made every effort to make sure that the information in our catalogues and on our web site is correct. We can not be held liable or responsible if any mistake or inaccuracy exists in specification, pricing or part number. We have the right to correct any error. The illustrations and photo's in our catalogues and on our web site are only representations, products supplied may vary from illustrations and photo's, but will function the same way with similar quality.

OUR PART NUMBERS & PRICES

All parts (or sets of parts) have our own part number and refer to one item only. THE QUANTITY REQUIRED ("QTY") stands for the quantity used for particular application. The quantity you order can be different and should be marked when you order. Parts not available new, might be available in second hand condition. These second hand parts are not always listed on the web site or in our price lists. Information will be sent to you on request. Prices shown on the web site and in the price lists are for one item and information only and are subject to change without prior notice. Prices on the web site can be seen with or without VAT depending on your choice. Price lists supplied with the catalogues can exclude or include local VAT, this is indicated on each price list. Part numbers are made from six figures. The first three figures will indicate the nature of the part. For example 161 stands for nuts, 162 for screws, 163 for washers, etc. The condition of the part we sell is indicated on the web site and in the price list. The following codes will appear on the web site in the catalogue parts lists and on the price lists supplied with catalogues, near the number, for the parts which are.. SH - Second Hand, EX - supplied on an EXCHANGE BASIS, and a SURCHARGE will be invoiced. NA - Currently NOT AVAILABLE. LH - Left Hand or RH - Right Hand. Always viewed from the drivers seat. LHD - left Hand Drive, RHD Right Hand Drive, A/R - AS REQUESTED, means the quantity required can vary from application to application. USE - the part number has been replaced by an other part number indicated.

ORDERS

Orders are welcome through the WEB SITE, E-MAIL, FAX, LETTER, TELEPHONE or by visiting a Anglo-Parts branch.

For orders not made through our Web site, can we please ask you to prepare the following, using our ORDER FORM.

- Your CUSTOMER NUMBER, name, address, telephone number work/home, fax number, codice fiscal (for Italian customers only) or VAT number for European companies.
- Specify if shipping address is different.
- CAR TYPE INFORMATION, make, model, year build etc.
- Provide Anglo Parts PART NUMBERS only.
- Indicate the quantity desired and parts description.
- Indicate method of payment: VISA, MASTER CARD, EURO CARD or advance payment by bank.
- Once an order placed, we put this in the computer system and the processing of labels, lists and checking lists will follow. Changing an order already placed, will hold up the whole system and automatically cause delays, we therefore ask for your help by checking your order twice prior to send it to us. This will help us deliver the parts in time. Thank you for your understanding.

PAYMENTS

CREDIT CARDS: At this time of writing, we accept the following credit cards: VISA, MASTER CARD, EURO CARD. Please supply credit card number (mostly 16 figures), expiring date and name as appears on the card.

BANK: When your merchandise is being picked, packed in boxes, weighed and sized, the invoice will be made and we inform you of the total amount to be paid, invoice **(Not for Web site)** number and our bank references. Please note the invoice number and your customer number with any payment you do.

SHIPMENT

NATIONAL: We deliver door to door and goods including the transport costs must be paid at delivery C.O.D., if a credit card was not used.

INTERNATIONAL: We ship UPS prepaid, for small parcels. The only cost still to be paid at reception might be your local TAX. For large or heavy parcels we use an economical and fast transport method. ANGLO PARTS packs its boxes very well and the risk of receiving damaged goods is very small, however the following must be noted. Anglo Parts will not be held responsible for goods lost or damaged in transit. For shortage or damage claims not caused by the transporter, a claim must be made within three days of receipt of the order. All packing materials should be retained. Transport of glass in not insurable and will be transported at your own risk.

RECEIVING YOUR GOODS

For all shipments, by arrival, please check that no seal or tape is broken and the package is not damaged. In case of any damage or shortage, write this on the carrier's sheet in accordance with the actual condition and quantity of contents BEFORE you sign the freight bill or receiving note. Keep your copy attached with the invoice and make a claim to the transport company immediately. In any case, save the packing material until everything is settled. Anglo Parts checks goods while picking from stock and again while packing but the final check must be made by the customer himself at arrival. Make sure that the parts received match the ones you ordered and that mechanical parts function correctly. Do not wait with checking the goods until you actually need them and report problems within three days of receiving the goods.

WARRANTY

Almost all parts made for the classic car industry are made in small quantities by companies who are willing to do this at an acceptable price. We at Anglo Parts check the goods for approval but we are not able to inspect each individual product. It is the responsibility of the user to make the final inspection of the part PRIOR TO fitting. Especially mechanical parts must be checked to make sure they are in perfect working condition. The warranty period starts from the invoice date, not from the installation date. Our parts carry normal and reasonable warranty but claims will be limited to the value of the component and in no case should cover labour, transport, failure of related component, failure resulting from faulty installation or parts being used for rally or competition. All products for warranty claim must be returned to the shop where you bought it by using the following procedures: the value must be over 8 euro, the goods must be sent back with shipping and taxes prepaid, all parts must be returned clean and well packed, once you or a third person has disassembled the part, our responsibility for it has ended. Anglo Parts will make the final decision of whether the unit was inherently defective or damaged during installation. We shall investigate this offer when we have received the goods back from you in undamaged condition. During the return these goods may not be damaged by poor packing or by transport. The warranty period for reconditioned parts is limited to 6 months and 4 months for rebuilt shock absorbers, most other parts are warranted against defects in material and workmanship by the original equipment manufacturer or by Anglo Parts nv for a period of one year starting with the date on the invoice.

RETURNS

If you received an incorrect item, and the mistake is yours, we are willing to restock this item and we will credit the value of the goods less a 15% restocking charge. No returns will be accepted without your invoice copy, after 30 days from the invoice date, for bearings, pistons, piston rings, goods by meter, trim parts (hoods, soft tops, tonneau covers, seat kits, panels etc.) books or any parts where installation has been attempted. Goods must be returned transport and taxes prepaid. Anglo Parts is not able to refund the taxes paid in the country of arrival, shipping or packing charges and commission we had to pay to the credit card company. You can use the value of this credit note again in a future order of the same value. We do not refund the value of credit notes.

SURCHARGE - CORE DEPOSITS

A surcharge will be added on the price for parts offered on an exchange basis. The surcharge price can be seen on the web site in the catalogue parts lists and is listed in our price list near the part number related and will be invoiced pending the return of the old reservicable unit. This surcharge will be refunded in full providing that we receive the unit complete, clean, drained of oil and returned within two months of our invoice date. Please also provide a copy of our invoice. All returns must be sent back with full shipping charge prepaid. If you export the old unit to us, a letter should be sent to us with your name, address, telephone number, date of sending and description of the goods you are returning, including the surcharge value. Please make some copies and stick one on the parcel, one into the packing and keep one for yourself. We will need this information for importing the goods. Upon its arrival we will immediately check the following points: is the packing well done and has there been any damage during the transport, is the old unit similar to the type of unit we have sent to you (correct original), is the unit complete and are the essential parts rebuildable. Please do not send a MGA wiper motor for exchange with a TD wiper motor, do not send a distributor without the advance system. In this latter sample we will refund the surcharge for the distributor less the value (in our opinion) of the advance system.

BACK ORDERS

Goods which are not in stock at the time of your order will be kept in back order. We will inform you when these are available again and parts will be reserved for you for a period of fourteen days starting from the day you were informed. If you do not contact us within this period, we will put the part(s) back in our stock to be sold to other customers. By ordering you can also specify "No Back orders" or ask us to cancel all previous back orders. When a part you had on back order becomes obsolete, we will let you know as well. If you decide to take this part in used condition, please ask us and we will do our best to obtain it, if possible.

© Van Gestel B&C 2006

Belangerijke informatie

BELANGRIJKE PUNTEN

De verkoopsvoorwaarden zijn op de achterzijde van de fakturen gedrukt en bevinden zich op onze web site. Aanpassingen worden in de recentste katalogus of prijslijst gezet en op onze web site bijgewerkt. Als u bij ons bestelt, gaat u akkoord met onze verkoopsvoorwaarden (en aanvaardt u ze). U mag altijd een nieuwe publikatie aanvragen. De recentste publikatie zal alle vorige vervolledigen en vervangen. Gelieve de belangrijkste punten hieronder vermeld te lezen.

ONZE VERKOPERS

We zijn geen getrainde technici en zijn niet aansprakelijk voor fouten die we zeggen of schrijven. We zijn autofanaten die u willen helpen. Voor technische uitleg bevelen we u de boeken uit de lijst in de katalogus aan.

ONZE KATALOGI

Geen inspanning was ons te groot de juiste informatie in onze katalogi en op onze web site te zetten. We kunnen niet aansprakelijk gesteld worden voor fouten of onnauwkeurigheden i.v.m. de specifiëring. de prijsbepaling of de onderdeelnummers. We hebben het recht een fout te verbeteren. De Illustraties en foto's in onze katalogen en op onze web site zijn slechts voorstellingen en er kunnen qua vorm kleine verschillen optreden, maar de geleverde produkten blijven qua kwaliteit en bestemming hetzelfde.

ONZE ONDERDEELNUMMERS EN PRIJZEN

Alle onderdelen (of sets van onderdelen) kregen van ons een stuknummer. De vereiste hoeveelheid (QT) staat voor de hoeveelheid voor afzonderlijk gebruik. De hoeveelheid die u vraagt kan verschillen en moet naast elk nummer van het onderdeel. dat u bestelt, vermeld staan. Gelieve te verwijzen naar onze recentste prijslijsten om de leverbaarheid te garanderen. Onderdelen die niet leverbaar zijn, kunnen soms tweedehands geleverd worden. Deze tweedehands onderdelen staan niet altijd in onze prijslijsten en op onze web site. De prijzen in onze prijslijsten en op onze web site zijn prijzen per stuk en staan er alleen ter informatie. Ze kunnen plots veranderen naargelang de stijging of daling van de inkoopprijs. Ze kunnen zonder of met B.T.W. vermeld staan. Dit is op elke prijslijst aangeduid. De stuknummers bestaan uit zes cijfers. De eerste drie cijfers geven de aard van het stuk aan. 161 staat bijvoorbeeld voor moeren, 162 voor schroeven, 163 voor platte rondellen. De staat van het onderdeel wordt in de prijslijst en op de web site vermeld of kan worden herkend aan het nummer. De volgende kodes zullen in de prijslijst en op de web site naast het nummer voor stukken, die niet nieuw geleverd worden, staan: SH = tweedehands, EX = geleverd op ruilbasis en een supplement zal worden aangerekend. NA = op het ogenblik niet beschikbaar. LH = links of RH = rechts. Bekeken vanuit de bestuurderszit. LHD = bestuurder aan linkerkant of RHD = bestuurder aan de rechterkant. A/R = Zoals vereist. Dit betekent dat de vereiste hoeveelheid naargelang de toepassing kan verschillen. USE = het stuknummer wordt door het aangegeven nummer vervangen.

BESTELLINGEN

U kan altijd bestellen via onze web site, per e-mail, fax, brief, telefoon, of gewoon in de winkel. **Voor bestellingen die niet langs onze web site gebeuren gelieve rekening te houden met de volgende gegevens, wanneer u ons bestelformulier gebruikt:**

- uw klantennummer, naam, adres, telefoonnummer werk/thuis, faxnummer, VAT(BTW)-nummer voor bedrijven;
- specifieer als het leveringsadres verschilt;
- informatie over de auto, merk, model, bouwjaar, enz.;
- gebruik zoveel mogelijk onze onderdeelnummers. Dit zal de behandeling van uw bestelling vergemakkelijken;
- geef het aantal stukken aan en beschrijf de onderdelen;
- duid de betaalwi jze aan: Bank (voorafbetaling), VISA, EUROCARD of MASTER CARD.
- Eens uw beselling geplaatst, zetten we deze in de computer. Automatisch volgen dan de etiketten, de picking lists en de checking lists. Als u een geplaatste bestelling wil wijzigen, kan deze het hele systeem in de war sturen en, op die manier fouten of vertragingen veroorzaken. Daarom vragen we u de bestelling goed na te kijken, **vóór u ze plaatst.** Dit zal ons helpen de onderdelen op tijd te leveren. We danken u voor uw begrip.

BETALINGEN

Kredietkaart: Op het tijdstip van publikatie aanvaarden we volgende kredietkaarten: VISA, EUROCARD, ACCES CARD, MASTERCARD. Gelieve het rekeningnummer, de vervaldag (en kode indien aangegeven) en de kaarthoudersnaam te vermelden.

Bank: **(Niet voor bestellingen via onze web site)** Als de goederen bijeengebracht, ingepakt, gewogen en gemeten zijn, zal het faktuur opgesteld worden en zullen we het totale te betalen bedrag, het faktuurnummer en onze bankgegevens meedelen. Gelieve het faktuurnummer en het klantennummer op elke betaling te noteren. (De betaling dient te gebeuren zonder bankkosten voor de begunstigde.)

VERZENDING

Nationaal: We leveren bij u thuis, en de goederen, transportkosten inbegrepen, moeten bij levering C.O.D. betaald worden, als u geen kredietkaart gebruikt.

Internationaal: We verzenden via UPS (United Parcel Services) voor kleine pakken, waarbij de transportkosten voorafbetaald zijn. Bij ontvangst betaalt u nog alleen de TAX indien u in een niet EEG land woont. Voor grote en zware pakken gebruiken we een goedkope en snelle transportmethode. Anglo Parts pakt zijn goederen goed in en het risiko op beschadiging is zeer klein. Toch moet u met het volgende rekening houden. Anglo Parts kan niet aansprakelijk gesteld worden voor verloren of beschadigde goederen tijdens het transport. Klachten over verlies en schade, die niet door de vervoerder veroorzaakt werden, moeten binnen drie dagen na de ontvangst van de bestelling ingediend worden. Al het verpakkingsmateriaal moet ter verifikatie bijgehouden worden. Het vervoer van glas is niet verzekerbaar en gebeurt op risiko van de koper.

ONTVANGST VAN DE GOEDEREN

Gelieve bij de ontvangst van elke verzending na te kijken of zegels en plakbanden niet stuk zijn en het pak niet beschadigd is. In geval van beschadiging of verlies, schrijft u dit op de vrachtbrief in overeenstemming met de aktuele toestand en hoeveelheid van de inhoud van uw verzending, **voordat u het ontvangstbewijs tekent.** Bewaar uw kopie bij het faktuur en dien onmiddellijk bij de transportfirma een klacht in. Hou in elk geval de verpakking tot de zaak geregeld is. Bij Anglo Parts kontroleren twee personen de goederen, de eerste keer tijdens het bijeenbrengen en de tweede keer bij het verpakken van de goederen om zeker geen fouten te maken. **Uiteindelijk moet de klant zelf de allerlaatste kontrole bij ontvangst uitvoeren.** Vergewis er u van dat u alle gefaktureerde goederen ontvangen heeft en dat alle mechanische goederen werken. Wacht niet met de kontrole van de goederen tot u ze werkelijk nodig heeft en meld problemen binnen drie dagen na ontvangst.

DE WAARBORG

Bijna alle onderdelen voor klassieke wagens worden in kleine hoeveelheden gefabriceerd door bedrijven, die dit voor een aanvaardbare prijs doen. Anglo Parts probeert zoveel mogelijk zelf de goederen na te kijken, maar we kunnen niet elk produkt kontroleren. **Vóór de montage moet de gebruiker de laatste kontrole zelf uitvoeren.** Vooral de mechanische produkten moeten worden nagekeken om er zeker van te zijn dat ze in de beste staat verkeren. De garantieperiode begint vanaf de faktuurdatum, **niet vanaf de datum van plaatsing.** De waarborg op onze onderdelen is normaal en redelijk, maar de klachten zijn beperkt tot de waarde van het komponent en dekt in geen geval: uurloon, transportkosten, fouten bij een komponent dat eraan vastzit, fouten als gevolg van een slechte plaatsing of onderdelen die voor rally of kompetitie gebruikt worden. Bij klachten i.v.m. de waarborg moeten alle produkten naar de winkel van aankoop teruggebracht worden. Daarbij moet u de volgende punten in acht nemen: -de waarde moet groter zijn dan 7,5 Euro -de verzendingskosten en taksen moeten bij terug-zending van de goederen voorafbetaald zijn; -alle goederen moeten schoon en goed verpakt teruggestuurd worden. Zodra U of derden het onderdeel uit elkaar hebben gehaald, zijn we niet meer aansprakelijk. Uiteindelijk beslist Anglo Parts zelf of het gaat over een intrinsiek defekt aan de eenheid, of het defekt bij plaatsing veroorzaakt werd. Goederen beschadigd door slechte verpakking of transport tijdens de terugzending komen niet in aanmerking voor onderzoek.

TERUGZENDEN

Wanneer U een verkeerd onderdeel als gevolg van uw foute bestelling ontvangen hebt, zijn we bereid het terug te nemen tegen de waarde van het goed voor onderdelen met een waarde van minimum 7,5 Euro. We rekenen u wel 15 % heropnamekosten aan. We aanvaarden geen terugzendingen: zonder een kopie van het faktuur, 30 dagen na de faktuurdatum, van lagers, zuigers, zuigerringen, goederen per lopende meter, bekledingsonderdelen (linnen kappen, hoofdsteunen, dekzeilen, zetelovertrekken, panelen, enz.) of elk ander goed waarbij men met de plaatsing wou beginnen. Bij terugzending moeten de taksen en transportkosten voorafbetaald zijn. Anglo Parts kan u, verpakkings-of verzendingskosten van het land van ontvangst en de kommissie, die we aan de kredietkaarteninstelling moesten betalen, niet vergoeden. De uitbetalling geschied via een waardebon.

SUPPLEMENT

Een supplement komt bovenop de prijs voor onderdelen, die op ruilbasis worden aangeboden. Dit supplement staat in de prijslijst en op onze web site naast het betrokken onderdeelnummer en zal gefaktureerd worden in afwachting van de terugzending van de oude, ingeruilde eenheid. Dit supplement wordt terugbetaald wanneer we de eenheid volledig, schoon, zonder olie en twee maanden na de faktuurdatum terugkrijgen. Gelieve ook een kopie van ons faktuur toe te voegen. De verzendingskosten moeten volledig door u voorafbetaald worden. Indien u ons de oude eenheid terugstuurt, vragen we u een brief te sturen met uw naam, adres, telefoonnummer, verzendingsdatum en beschrijving van de goederen, het supplement inbegrepen. Gelieve enkele kopieën te maken waarvan één exemplaar op het pak te bevestigen, één in het pak te steken en één zelf te bewaren. We hebben ze nodig bij de invoer van de goederen. Bij de aankomst van de goederen kijken we onmiddellijk de volgende punten na: - Is het stuk goed verpakt ? - Werd het tijdens het transport beschadigd ? - Komt de oude eenheid met het type, dat we u zonden, overeen (het juiste origineel) ? - Is de eenheid volledig en zijn de essentiële onderdelen nog reviseerbaar ? Gelieve geen MGA ruitenwissermotor te sturen voor ruil met een TD ruitenwissermotor of zend ons geen motor met een gebroken krukas. In dit laatste geval zullen we alleen de stukwaarde min de waarde (volgens onze beoordeling) van de krukas terugbetalen.

BACK ORDERS

De goederen, die we op het tijdstip van uw bestelling niet in voorraad hebben, houden we in "back order". We laten u dan weten wanneer we ze u opnieuw kunnen leveren. We reserveren de onderdelen voor u voor een periode van veertien dagen (vanaf het ogenblik waarop we onze brief gepost hebben). Indien u ons binnen die periode niet gekontakteerd hebt zijn deze onderdelen niet meer voor U gereserveerd. Als u bestelt, kan u altijd specifiëren "geen back orders" of ons vragen alle vorige te annuleren. Als een onderdeel in "back order" niet meer kan worden geleverd, laten we u dit ook weten. Als u dan beslist dit onderdeel tweedehands te kopen, gelieve dit te vragen en we zullen al het mogelijke doen het onderdeel te vinden.

© Van Gestel B&C 2006

Informations importantes

Les illustrations dans ce catalogue ne sont que des représentations. Les produits fournis peuvent être différents en ce qui concerne la forme, mais la qualité et le but restant pareils.

LES POINTS IMPORTANTS

Les conditions de vente sont imprimées au verso des factures et les modifications sont mentionnées dans la catalogue la plus récent et dans la liste de prix. Si vous commandez chez nous, vous êtes d'accord avec nos conditions de vente (vous le acceptez). Vous pouvez toujours demandez une nouvelle publication. L'édition complètera et remplacera toutes les précédentes. Vieillez lire les points les plus importants, mentionnés ci-dessous.

NOS VENDEURS

Nous ne sommes pas des techniciens bien expérimentés et nous ne somme pas responsable des erreurs que nous disons ou écrivons. Nous sommes des enthousiastes et voulons vous aider. Pour une explication un peu plus technique, nous vous recommandons les livres de la liste de notre catalogue.

NOS CATALOGUES

Nous nous sommes efforcés à mettre dans notre catalogue des information correctes. Nous ne pouvons pas être rendu (civilment) responsables d'erreurs ou d'inexactitudes concernant la spécification, l'estimation, ou les numéros de pièce. Nous avons le droit de corriger une faute.

NOS NUMEROS DE PIECE ET LES PRIX

Nous avons donné à chaque pièce (ou sets de pièces) un numéro. La quantité requise (QT) se réfère à la quantité pour un usage particulier. La quantité que vous demander peut être différente et doit se trouver à côté de chaque numéro de pièce que vous commandez. Veuillez vous référer à nos listes de prix le plus révicentes pour garantir la disponibilité. Des pièces non disponibles peuvent être fournies en occasion. Ces pièces en occasion ne se trouvent pas toujours dans nos listes. Les prix dans nos listes de prix sont des prix par pièce et s'y trouvent seulement à titre informatif. Ils peuvent varier selon l'augmentation ou la baisse des prix d'achat. Ils peuvent être mentionnés sans ou avec la T.V.A. Ceci est indiqué dans la liste de prix. Les numéros de pièce se composent de chiffres. Les trois premiers chiffres indiquent la nature de la pièce. 161 se réfère par example à écrous, 162 à boulons, 163 à rondelles plates. L'état de la pièce est mentionné dans la liste de prix ou peut être reconnu au numéro. Les codes suivants se trouvent dans la liste à côté du numéro de pièces qui ne sont pas livrées comme nouvelles. SH = en occasion, EX - fourni sur base d'échange et on vous comptera un supplément. NA - pas disponible en ce moment. LH - gauche ou RH - droite. Vu du point de vue du siège du conducteur. LHD - le conducteur à gauche. RHD - le conducteur à droite. A/D - comme requis. Cela signifie que la quantité requise peut être différents selon l'application. USE - le numéro de pièce a été remplacé par le numéro indiqué.

LES COMMANDES

Vous pouvez toujours commander par courrier, par téléphone, par téléfax, ou bien au magasin. Veuillez tenir compte des données suivantes si vous employez notre bon de commande:

- votre numéro de client, votre nom, votre adress, votre numéro de téléphone travail/privé, votre numéro de fax, le numéro de T.V.A. pour les entreprises;
- spécifiez si l'adress de livraison est différente;
- informations sur la voiture: la marque, le modèle, l'année de construction, etc.;
- utilisez autant que possible nos numéros de pièce. De cette manière, nous pouvons traiter vos commandes plus rapidement;
- donnez le nombre des pièces et décrivez les;
- indiquez le moyen de paiement: Banque, paiement à l'avance, VISA, EUROCARD, MASTER CARD. Une fois votre commande passée, nous l'introduisons dans l'ordinateur. Les étiquettes, les "picking lists" et les "checking lists" suivent automatiquement. Si vous voulez modifier une commande passée, vous risquez de confondre tout le système et, de cette manière, causer des erreurs ou des retards. C'est pourquoi nous vous demandons de **bien contrôler votre commande avant de la passer.** Cela nous aidera à livrer les pièces à temps. Nous vous remercions pour votre aide.

LES PAIEMENTS

La carte de crédit: Au moment de la publication, nous acceptons les cartes de crédits suivantes: VISA, ACCESSCARD, MASTERCARD. Veuillez mentionner le numéro de compte, l'échéance (et le code si indiqué) et le nom du titulaire de carte.

La Banque: Si les produits ont été ramassés, emballés, pasés et mesurés, on rédigera la facture et nous communiquerons le montant total à payer, le numéro de la facture et nos données bancaires. Veuillez noter pour chaque paiement le numéro de client. (Le paiement doit arriver sans frais bancaires pour le bénéficiaire.)

L'EXPEDITION

National: nous livrons chez vous, et les produits, frais de transport inclus, doivent être payés COD à la livraison si vous n'utilisez pas de carte de crédit.
International: nous expédions par U.P.S. (United Parcel Services). Il faut payer d'avance les frais de transport pour les petits paquets. À la réception, vous ne payerez plus que la TAXE si vous n'habitez pas dans un pays de la CEE. Pour les paquets plus grands, nous utilisons une méthode plus rapide et moins chère. Anglo Parts emballe bien les produits et la risque d'endommager est très petit. Il faut cependant tenir compte de ce qui suit. Anglo Parts ne peut être rendue responsable produits endommagés ou perdus pendant le transport. Il faut introduire les plaintes de pertes ou dégats dans trois jours après la réception de la commande. Il faut garder le matériel d'emballage pour vérification. Nous n'assurons pas le transport de verre et le transport se passe au risque de l'acheteur.

LA RECEPTION DES PRODUITS

Veuillez contrôler à la réception de chaque envoi si les cachets et les scathes sont cassés si le paquet n'est pas endommagé. En cas de pertes ou dégâts, vous l'inscrivez sur la connaissement en concordance avec l'état actuel et le quantité de votre envoi **avant de signer le reçu.** Gardez la copie avec la facture et introduisez immédiatement une plainte chez le transporteur. Gardez en tout cas l'emballage jusqu'à ce que les problèmes soient résolus. Chez Anglo Parts, deux personnes vérifient les produits, d'abord au ramassage et ensuite à l'emballage des produits pour éviter des erreurs. **Finalement, le client même doit vérifier et dernier lieu les produits à la réception.** Vérifiez si vous avez reçu tous les produits et si tous les produits mécaniques fonctionnent. Ne reportez pas le contrôle jusqu'au moment où vous en avez besoin, et rapportez les produits dans trois jours après la réception.

LA GARANTIE

Presque toutes les pièces de voitures classiques sont fabriquées par des entreprises qui le font à un prix raisonable. Anglo Parts essaie, autant que possible, de contrôler elle-même les produits, mais nous ne pouvons pas contrôler chaque produit. **Avant le montage, le client doit effectuer lui-même le dernier contrôle.** Il faut vérifier les produits mécaniques pour être sûr qu'ils se trouvent en bon état. La période de garantie commence à partir de la date de la facture, **et pas à partir de la date de l'installation.** La garantie de nos pièces est normale et raisonnable, mais les plaintes sont limitées à la valeur de l'élément et ne couvre en aucun cas le salaire à l'heure, le transport, les défauts d'un élément relatif, les défauts à la suite d'une mauvaise installation ou les pièces qui sont utilisées pour les "rally" ou les competitions. En cas de plainte concernant la garantie, il faut rapporter tous les produits au magasin d'achat en tenant compte des points suivants: - la valeur doit dépasser 7,5 Euro les frais d'expédition et les taxes doivent être payés d'avance au renvoi des produits; - il faut renvoyer les produits propres et bien emballés. A partir du moment où une tierce personne a démonté les pièces, nous ne sommes plus responsables. Finalement, Anglo Parts décide elle-même s'il s'agit d'un défaut inhérant à l'unité ou bien d'un défaut dû à l'installation. Les produits endommagés par un mauvais emballage ou un transport inadéquat pendant le renvoi ne seront pas pris en considération de vérification.

LA REEXPEDITION

Si vous avez reçu une fausse pièce à la suite de votre commande incorrecte, nous sommes prêts à reprendre la pièce contre la valeur du produit, moins 15% des frais de reprise. Veuillez noter que les pièces doivent avoir une valeur de minimum 7,5 Euro. Nous n'acceptons pas de réexpédition sans une copie de la facture, trente jours après la date de la facture, des produits au mètre, des anneaux-pistons, des pièces de rechange de garniture intérieur (comme des capotes, des moquettes, des velours, des couvres toneau) ou de toute pièce dont l'installation a déjà été commencée. A la réexpédition, tous les frais de transport et les taxes doivent être payés d'avance. Anglo Parts ne peut pas rembourser les frais d'emballage et d'expédition du pays de réception, ainsi que la provision qu'elle a dû payer aux carte crédits. Nous vous remboursons ce montant avec un "Gift Certificate".

LE SUPPLEMENT

Un supplément s'ajoute au prix pour les pièces qui seront offertes sur bases d'échange. Ce supplément se trouve dans la liste de prix à côté de numéro de pièce y relatif et sera facturé en attente de renvoi de la vieille unité échangée. Ce supplément sera remboursé quant nous recevrons, deux mois après la date de la facture, l'unité entière, propre et sans huile. Veuillez aussi y ajouter une copie de notre facture. Il faut que vous payiez les frais d'expédition d'avance. Si vous nous renvoyez la vieille unité, nous vous demandons d'envoyer une lettre avec votre nom, votre adress, votre numéro de téléphone, la date d'expédition et la description du produit, le supplément inclus. Veuillez faire quelques copies, dont vous en attachez une au paquet, dont vous en mettez un dans le paquet et dont vous en gardez une pour vous-même. Nous en avons besoin à l'importation des produits. A l'arivée des produits, nous vérifions les points suivants: - la pièece, est-elle bien emballé? - A-t-elle été endommagée pendant le transport? - le vieille unité, correspond-t-elle au type nous vous avons envoyé (l'original)? - l'unité, est-elle complète et les pièces essentielles sont-elles encore révisables? Veuillez ne pas envoyer de moteur d'essuie-glace au lieu d'un moteur Spitfire ou ne envoyez pas un moteur avec un arbre-coude cassé. Dans ce dernier cas, nous ne rembourserons que la valeur de la pièce moins le valeur de l'arbre-coude (selon notre estimation).

LES "BACK ORDERS"

Les produits que nous n'avons pas en stock au moment de votre commande sont gardés en "back order". Nous vous laissons savoir quand nous pouvons à nouveau vous les livrer. Nous vous réservons les pièces pendant une période de 15 jours (à partir du moment où nous avons posté notre lettre). Si vous nous contactez pas pendant cette période, les pièces ne vous sont plus réservées. Si vous commandez, vous pouvez toujours spécifier "pas de back orders", ou bien nous demander d'annuler tous les "back orders" précédents. Si nous ne pouvons plus livrer une pièce en "back order", nous vous le laissons savoir. Si vous décidez d'acheter cette pièce en occasion, veuillez le demander et nous ferons notre possible pour la trouver.

© Van Gestel B&C 2006

Wichtige Auskünfte

1. EINFÜHRUNG

Die Abbildungen in diesem Katalog oder auf unserer Webseite sind nicht exakt oder maßstabsgerecht. Die tatsächlichen Teile können geringfügig von den Abbildungen abweichen, die Qualität und die Verwendbarkeit werden jedoch nicht beeinträchtigt. Die Rover-Gruppe liefert keine Ersatzteile mehr, daher übernimmt ANGLO-PARTS diese Dienstleistung, indem weltweit Rover-Ersatzteile von ANGLO-PARTS eingeführt, neu hergestellt und ausgeliefert werden. Wir benutzen dazu Original "blue prints" und Original-Musterbauteile, um einen erschwinglichen Preis zu garantieren. Die Musterteile werden außerdem noch von anderen Originalherstellern wie z. B. Lucas, Lockheed, Armstrong, Vandervell, Glacier, Borg & Beck etc. hergestellt. Wenn Originalteile dieser Hersteller verfügbar sind, wird ANGLO-PARTS Ihnen diese Teile liefern, auch wenn sie etwas teurer sind. Wir sind der Meinung, dass Qualität und Authentizität an erster Stelle stehen sollten.

2. ALLGEMEINE GESCHÄFTSBEDINGUNGEN

Wir verkaufen und liefern ausschließlich auf der Basis unserer Allgemeinen Verkaufs- und Lieferbedingungen, die auf der Rückseite der Bestellformulare und Rechnungen abgedruckt sind. Sie finden diese Allgemeinen Geschäftsbedingungen auch in diesem Katalog. Wenn Sie bei uns bestellen, sind Sie mit unseren Verkaufsbedingungen einverstanden und akzeptieren diese. Die Firma ANGLO-PARTS behält sich vor, die Allgemeinen Geschäftsbedingungen von Zeit zu Zeit neuen Gegebenheiten anzupassen, und die jeweils letzte Fassung findet Anwendung auf die Verträge.

3. TECHNIK

Für technische Erläuterungen empfehlen wir Ihnen die Handbücher im Inhaltsverzeichnis des Kataloges. Wir übernehmen keine Gewähr für technische Informationen in unseren Katalogen, diese dienen lediglich der Darstellung unserer Waren.

4. KATALOG

Wir haben uns bemüht, unsere Kataloge so sorgfältig wie möglich zu erstellen. Wir übernehmen keine Verantwortung für Fehler oder Ungenauigkeiten im Zusammenhang mit der Spezifizierung, der Preisbestimmung oder den Ersatzteilnummern. Wir behalten uns das Recht vor, aufgetretene Fehler ohne Rechtsnachteile für uns zu verbessern. Gewährleistungsansprüche entstehen nicht, wenn der Fehler zurückzuführen ist auf Verletzung von Bedienungs-, Wartungs- und Einbauvorschriften, ungeeignete oder unsachgemäße Verwendung, fehlerhafte oder nachlässige Behandlung und natürlichen Verschleiß des Liefergegenstandes sowie Schäden aus sportlichen Einsätzen. Zugesicherte Eigenschaften müssen ausdrücklich schriftlich im Einzelnen als solche bezeichnet werden.

5. ERSATZTEILNUMMERN UND PREISE

Alle Ersatzteile oder Gruppen von Ersatzteilen haben von uns eine Ersatzteilnummer erhalten. Die Abkürzung QTY steht für die für einen bestimmten Einsatz erforderliche Menge des jeweiligen Ersatzteiles. Die von Ihnen bestellte Liefermenge kann davon abweichen und sollte deutlich neben der jeweiligen Ersatzteilnummer angegeben werden. Bitte verwenden Sie die jeweils neueste Preisliste, um die Lieferbarkeit zu gewährleisten. Ersatzteile, die nicht lieferbar sind, können wir manchmal aus zweiter Hand besorgen. Diese Gebraucht-Ersatzteile stehen nicht immer in unserer Preislisten. Die Preise in unserer Preisliste sind Stückpreise, sie können sich infolge einer Veränderung der Einkaufspreise ebenfalls ändern. Die Listenpreise beinhalten, falls nicht anders bezeichnet, die jeweilige gesetzliche Mehrwertsteuer. Die Ersatzteil-Nummern bestehen aus sechs Ziffern. Die ersten drei Ziffern geben die Art des Ersatzteils an: 161 z. B. steht für Muttern, 162 für Schrauben und 163 für Scheiben. Der Zustand des Ersatzteiles wird in der Preisliste erwähnt oder kann anhand der Nummer erkannt werden. Die folgenden Codes stehen in der Preisliste neben der Ersatzteilnummer, falls dieses Teil nicht neu geliefert werden kann: SH bedeutet aus zweiter Hand, EX wird auf Tauschbasis geliefert, und ein Mehrpreis (Surcharge/Surch) wird berechnet, NA bedeutet im Augenblick nicht erhältlich. LH bedeutet links, RH rechts - jeweils vom Fahrer aus gesehen. LHD bedeutet Fahrer auf der linken Seite und RHD Fahrer auf der rechten Seite. A/R bedeutet "wie erforderlich", das heißt, dass die erforderliche Menge nach dem Zweck unterschiedlich sein kann. Durch die Abkürzung USE wird eine neue Ersatzteilnummer bezeichnet, welche die ursprüngliche Nummer ersetzt.

6. AUFTRAGSERTEILUNG

Sie können per Fax, Brief, telefonisch oder wie gewohnt im Shop bestellen. Bei Verwendung unseres Bestellformulars möchten wir Sie bitten, dieses vollständig auszufüllen: Ihre Kunden-Nummer, Adresse, Telefon- und Faxnummer, Umsatzsteuer-ID-Nummer (gewerblich).

- Spezifizieren Sie die Lieferadresse, falls diese von der Rechnungsanschrift abweicht.
- Geben Sie uns die vollständigen Angaben zu Ihrem Fahrzeug wie Marke, Typ, Baujahr usw.
- Benutzen Sie ausschließlich unsere Ersatzteilnummern, dadurch kann Ihre Bestellung schneller bearbeitet werden.
- Geben Sie die gewünschte Menge der Ersatzteile unter Verwendung der Beschreibung im Katalog an.
- Geben Sie die Art der Zahlungsweise an.
- Sobald wir Ihren Auftrag erhalten haben, wird dieser elektronisch weiterverarbeitet, automatisch werden dann daraus die Bestellungen, Lieferscheine und Rechnungen erstellt. Wenn Sie einen einmal gegebenen Auftrag ändern möchten, kann dies zu Fehlern oder Verspätungen führen. Deshalb möchten wir Sie bitten, den Auftrag vor Erteilung genauestens zu überprüfen. Dies hilft uns, die Ersatzteile pünktlich zu liefern. Vielen Dank für Ihr Verständnis.

7. ZAHLUNGSWEISE

Sobald die Bestellung konfektioniert, verpackt, gewogen und gemessen wurde, wird die Rechnung erstellt, und wir werden Ihnen den vollständigen Rechnungsbetrag, die Rechnungsnummer und unsere Bankverbindung mitteilen. Bitte geben Sie bei jeder Zahlung die Rechnungsnummer und Ihre Kundennummer an. Kreditkarten: Zum Zeitpunkt der Drucklegung dieser Allgemeinen Informationen akzeptieren wir folgende Kreditkarten: Visa, Eurocard, Accesscard, Mastercard. Bitte geben Sie bei Kreditkartenzahlung die Kartennummer, das Verfalldatum (und die Prüfnummer, wenn angegeben) sowie den Namen des Karteninhabers an. Eine Zahlung per Nachnahme ist nur im Inland möglich.

8. VERSENDUNG

Da der Versand unserer Waren auf Gefahr und Kosten des Bestellers erfolgt, bitten wir Sie, in der Bestellung zu spezifizieren, ob Sie die Waren abholen oder einen Dritten mit der Lieferung beauftragen. ANGLO-PARTS wird die bestellten Waren ausreichend verpacken, um das Risiko von Transportbeschädigungen zu reduzieren. ANGLO-PARTS ist nicht verantwortlich für Ware, die beim Transport verlorengegangen oder beschädigt wurde. ANGLO-PARTS übernimmt keine Haftung für den Frachtführer, der im Auftrag des Bestellers tätig wird. Wir empfehlen daher bei Erhalt der Ware: Überprüfen Sie bitte bei Lieferung der Ware, ob die Verpackung, eventuelle Siegel oder Klebestreifen aufgebrochen wurden und ob die Verpackung beschädigt ist. Für den Fall einer Beschädigung oder das Fehlen von Teilen machen Sie bitte eine entsprechende Notiz auf den Frachtbrief hinsichtlich des Zustandes und des Inhaltes Ihrer Sendung, bevor Sie den Erhalt quittieren. Behalten Sie Ihre Kopie der Rechnung und setzen Sie sich sofort mit Ihrem Frachtführer in Verbindung. Bewahren Sie die Verpackung auf, bis die Fragen geklärt wurden. Wir überprüfen zweimal die Vollständigkeit der Bestellung, das erste Mal beim Konfektionieren und das zweite Mal beim Verpacken der Waren. Daneben sind Sie allerdings verpflichtet, die letzte Kontrolle durchzuführen. Wir verweisen auf die Fristen in unseren Allgemeinen Verkaufs- und Lieferbedingungen.

9. RÜCKSENDUNGEN

Wenn Sie ein Ersatzteil erhalten, für dieses aber keine Verwendung haben und Sie diese Falschbestellung zu vertreten haben, sind wir bereit, diesen Artikel zurückzunehmen. Rücksendungen erfolgen auf Kosten und Gefahr des Bestellers. Wir werden Ihnen den Rechnungsbetrag der Waren abzüglich einer Wiedereinlagerungsgebühr von 15 % erstatten. Wir akzeptieren keine Rücksendung ohne eine Durchschrift unserer Rechnung. Nach Ablauf von mehr als 30 Tagen nach dem Rechnungsdatum akzeptieren wir keine Rücksendung. Lager, Kolben, Kolbenringe, Meterware und Verkleidungsteile (Kopfstützen, Verdecke, Verdeckabdeckungen, Sitzbezüge, Türverkleidungen) sind vom Umtausch ausgeschlossen. Dies gilt auch für Ersatzteile, mit denen ein Installationsversuch unternommen wurde. Wir erstatten keinerlei Verpackungs- und Versandkosten sowie Servicegebühren, die wir an Kreditkartenfirmen bezahlt haben. Die Rückzahlung erfolgt über einen Warengutschein in Höhe des Rückzahlungsbetrages.

10. LIEFERUNG VON ERSATZTEILEN AUF AUSTAUSCHBASIS

Für Ersatzteile, die von uns auf Austauschbasis angeboten werden, berechnen wir einen Mehrkostenpreis. Dieser Mehrkostenpreis ist in unserem Preisverzeichnis neben der betreffenden Ersatzteilnummer angegeben. Bei Bestellung eines Ersatzteiles auf Austauschbasis wird neben dem Preis für das Ersatzteil auch der Mehrkostenpreis in Rechnung gestellt. Dieser Mehrkostenpreis wird ganz oder teilweise zurückerstattet, vorausgesetzt wir erhalten vom Besteller das entsprechende Austauschteil komplett, sauber und ölfrei und innerhalb von zwei Monaten nach unserem Rechnungsdatum. Bitte senden Sie eine Kopie unserer Rechnung mit. Die Versendung des Austauschteiles erfolgt auf Gefahr und Kosten des Bestellers. Wenn Sie uns das Austauschteil aus dem Ausland schicken, sollten Sie uns einen Brief beilegen, der Ihren Namen, Anschrift, Telefonnummer und das Versendungsdatum sowie eine Beschreibung der Güter beinhaltet und den Mehrkostenbetrag. Bitte fertigen Sie von diesem Brief einige Kopien an, fügen eine dem Paket bei, kleben eine auf das Paket und behalten eine weitere für Ihre eigenen Unterlagen. Wir benötigen diese Informationen für die Einfuhrabfertigung. Bei Eingang der Ware überprüfen wir sofort die folgenden Punkte: War das Teil ausreichend verpackt oder sind Transportbeschädigungen aufgetreten? (Wenn ja, werden wir Sie sofort davon in Kenntnis setzen). Entspricht das Altteil dem von uns gelieferten Teil? Ist das Altteil vollständig, und sind die wichtigsten Ersatzteile noch wiederherstellbar? Bitte beachten Sie, dass wir im Falle der Übersendung eines Falschteiles oder eines beschädigten Teiles nur den jeweiligen Stückwert des zurückgesandten Teiles erstatten. Insoweit führen wir eine Schätzung durch.

11. NACHLIEFERUNGEN

Waren, die zum Zeitpunkt Ihres Auftrages nicht vorrätig sind, werden als Nachlieferung (Backorder) behandelt. Wir werden Sie sofort über die Verfügbarkeit der Teile informieren. Das Ersatzteil ist mit einer Frist von 14 Tagen nach Absendung unserer Benachrichtigung für Sie reserviert. Sollten Sie diese Frist verstreichen lassen, verfällt die Nachlieferung. Wenn Sie keine Nachlieferung erhalten möchten, können Sie bei Auftragserteilung auch "keine Nachlieferungen" vermerken. Nachlieferungen können zu jeder Zeit annulliert werden. Wenn das Ersatzteil nicht mehr lieferbar ist, werden wir Sie sofort davon in Kenntnis setzen. Sie können dann entscheiden, ob Sie das Ersatzteil aus zweiter Hand kaufen wollen. Sobald uns ein entsprechender Auftrag vorliegt, werden wir uns bemühen, dieses Ersatzteil für Sie zu besorgen.

© Van Gestel B&C 2006

Allgemeine Verkaufs- und Lieferbedingungen der ANGLO-PARTS Autoteile GmbH~ Wetzlar

1. Lieferungen durch uns erfolgen ausschließlich unter Zugrundelegung unserer nachfolgenden Verkaufs- und Lieferbedingungen. Bestellungen nehmen wir ausschließich zu diesen Bedingungen an. Änderungen und Ergänzungen bedürfen der Schriftform. Andere Allgemeine Geschäftsbedingungen gelten auch dann nicht, wenn ihnen im Einzelfall nicht ausdrücklich widersprochen wurde.

2. Wird eine Bestellung schriftl., mündlich oder auf andere weise getätigt, bleibt dem Besteller eine Frist von 7 Werktagen, um diese Bestellung zu wiederrrufen, sofern noch keine Lieferung erfolgt ist. Nach Ablauf der 7-Tage Frist hat Anglo-Parts das Recht 30% des Bestellwertes dem Kunden zu berechnen oder 30% vom Wert eines Vertrages zu berechnen. Der Kunde hat außerdem innerhalb einer Frist von 7 Werktagen, nach Erhalt der Ware, die möglichkeit die erhaltene Ware an Anglo-Parts zurückzugeben (gemäß Punkt 9 "WICHTIGE AUSKÜNFTE").
Der Versand unserer Ware erfolgt auf Gefahr und auf Kosten des Bestellers. Die tatsächliche Höhe der der Transport- und Verpackungskosten können nur berechnet werden, nach der Zusammenstellung und Verpackung der Warensendung. (da Größen- und Gewichtsabhängig.)

3. Sofern der Versand nicht gegen Nachnahme erfolgt, sind Zahlungen rein netto innerhalb von 10 Tagen nach Rechnungserhalt zu leisten. Im Verzugsfall hat der Besteller Verzugszinsen in Höhe von 3 % über dem jeweils geltenden Diskontsatz der Deutschen Bundesbank zu bezahlen. Die Geltendmachung eines weiteren Verzugsschadens bleibt vorbehalten.

4. Der Besteller ist - sofern er Kaufmann ist - verpflichtet, unsere Ware unmittelbar nach Erhalt auf Mängel zu untersuchen und eventuelle Mängel unverzüglich, spätestens innerhalb von 8 Tagen nach Erhalt der Ware - bei zunächst nicht erkennbaren Mängeln innerhalb von 8 Tagen nach deren Bekanntwerden - per Einschreiben bei uns geltend zu machen. Bei offensichtlichen Mängeln trifft die vorgenannte Verpflichtung auch Nichtkaufleute. Werden berechtigte Mängel gerügt, sind wir lediglich zur Nachbesserung bzw. zur Ersatzlieferung verpf!ichtet, allerdings erst, nachdem uns die von uns gelieferte Ware zur Verfügung gestellt worden ist. Wir behalten uns die Überprüfung etwa gerügter Mängel durch den jeweiligen Hersteller vor und sind nicht zu Nachbesserungen oder Ersatzlieferungen verpflichtet, bevor dessen Prüfungsergebnis vorliegt. Nach endgültig fehlgeschlagener Nachbesserung bzw. Ersatzlieferung ist der Besteller zur Wandelung oder Minderung berechtigt. Gewährleistungsansprüche entstehen nicht, wenn der Fehler zurückzuführen ist auf Verletzung von Bedienungs-, Wartungs- und Einbauvorschriften, ungeeignete oder unsachgemäße Verwendung, fehlerhafte oder nachlässige Behandlung und natürlichen Verschleiß sowie vom Besteller oder Dritten vorgenommenen Eingriffen in den Liefergegenstand sowie Schäden aus sportlichen Einsätzen.

5. Schadenersatzanspruche des Bestellers - aus welchem Rechtsgrund auch immer - insbesondere der Ersatz für verspätete Auslieferung und mittelbare Schäden sind ausgeschlossen. Dies gilt nicht, soweit uns Vorsatz oder grobe Fahrlässigkeit zur Last fällt.

6. Wir behalten uns das Eigentum an sämtlichen von uns gelieferten Waren bis zur restlosen Bezahlung sämtlicher Forderungen aus unserer Geschäftsbeziehung mit dem Besteller vor. Veräußert der Besteller die gelieferte Ware weiter, so tritt er hiermit schon jetzt die ihm aus der Veraußerung entstehenden Forderungen gegen seinen Abnehmer in voller Höhe an uns ab. Übersteigt der Wert unserer Sicherheiten gegen den Besteller (etwaige Eigentumsvorbehalte zuzüglich etwaiger Forderungsabtretungen) unsere Forderung gegen den Besteller, so werden wir auf dessen Verlangen die Sicherheiten, die unsere Forderung übersteigen, freigeben.

7. Bei vom Besteller zu vertretender Falschbestellung ist ANGLO-PARTS bereit, unbeschädigte Artikel zurückzunehmen. Die Rücksendung erfolgt unter Beifügung einer Rechnungskopie auf Kosten und Gefahr des Bestellers. Eine Rücksendung ist nicht mehr möglich 30 Tage nach dem Rechnungsdatum. Bei Ersatzteilen mit denen ein Einbauversuch unternommen wurde, ist eine Rücksendung ebenfalls ausgeschlossen. ANGLO-PARTS erstattet den Rechnungsbetrag der zurückgesandten Ersatzteile abzüglich einer Wiedereinlagerungsgebuhr von 15 % des Rechnungsbetrages.

8. Für Ersatzteile die auf Austauschbasis angeboten werden, wird der in der Preisliste neben dem Ersatzteilpreis angegebene Mehrkostenpreis berechnet. Dieser Mehrkostenpreis wird ganz oder teilweise zurückerstattet, vorausgesetzt der Besteller übersendet auf eigene Kosten und Risiko unter Beifügung einer Rechnungskopie das entsprechende alte Bauteil komplett, sauber und ölfrei innerhalb von zwei Monaten nach Rechnungsdatum. Bei Rücksendungen aus dem Ausland muß der Besteller eine Bestätigung beifügen, aus der sein Name, Anschrift das Versendungsdatum sowie eine Beschreibung der Güter hervorgeht. Bei der Rücksendung eines falschen Bauteils wird nur der jeweilige Stückwert erstattet. Insoweit führt ANGLO-PARTS eine Schätzung durch.

9. Ersatzteile die bei Erteilung des Auftrages nicht lieferbar sind, werden, wenn keine anderslautende Anweisung des Bestellers vorliegt, als Backorder behandelt. Bei Eintritt der Lieferfähigkeit wird der Besteller in Kenntnis gesetzt. Die entsprechenden Ersatzteile werden für einen Zeitraum von 14 Tagen nach Absendung der Bestätigung für den Besteller reserviert. Backorders können jederzeit vom Besteller annulliert werden.

10. Als Erfüllungsort fur die Lieferung und Zahlung sowie als Gerichtsstand gilt - sofern der Besteller Kaufmann ist - Wetzlar als vereinbart Darüberhinaus gilt ausschließlich das Recht der Bundesrepublik Deutschland. Das Übereinkommen der Vereinten Nationen vom 11.04.1980 uber Verträge über den internationalen Warenkauf findet keine Anwendung.

11 Sollte eine Bestimmung dieser Bedingungen und der von uns mit dem Besteller getroffenen weiteren Vereinbarungen unwirksam sein oder werden, so wird dadurch die Gültigkeit des Vertrages im übrigen nicht berührt. Die Vertragspartner sind verpflichtet, die unwirksame Bestimmung durch eine solche zu ersetzen, mit der der wirtschaftliche Erfolg der unwirksamen Bestimmung möglichst erreicht wird. Sollten sich aus diesen Allgemeine Verkaufs- und Lieferbedingungen und den Allgemeinen Informationen Wiedersprüche ergeben, genießen diese Allgemeine Verkaufs und Lieferbedingungen Vorrang.

12. Hinweis gemäß § 33 BDSG: Name und Anschrift des Auftraggebers sowie alle für die Auftragsabwicklung erfoderlichen persönlichen Daten werden ausschließlich für eigenen geschäftlichen Zwecke in automatisierten Dateien gespeichert und Dritten nicht zugänglich gemacht.

© Van Gestel B&C 2006

Informazioni importante

INFORMAZIONI IMPORTANTI

Le illustrazioni sono soltanto delle rappresentazioni. Delle piccole differenze sono possibili per quanto riguarda la forma, ma la qualità e l'utilizzo restano uguali.

PUNTI IMPORTANTI

Le condizioni di vendita sono stampate sul retro della fattura e le eventuali differenze sono riportate nel catalogo nel listino prezzi aggiornati; se ordina da noi, condivide le nostre condizioni di vendita (le accetta). Può sempre chiedere l'edizine aggiornata che completerà e sostituirà tutte le precedenti. E' pregato di leggere attentamente i puniti seguenti.

I NOSTRI VENDITORI

Non sono dei tecnici perciò non sono responsabili degli errori che commettono. Sono altresì entusiasti di poterLa aiutare; per maggiori chiarimenti Le cosigliamo i libri tecnici che troverà nel catalogo.

I NOSTRI CATALOGHI

Ci siamo impegnati per dare, nei nostri cataloghi, informazioni il più possibile corrette. Non siamo, quindi, responsabili di eventuali errori o inesattezze sulla specificazione, sul prezzo o sui numeri di codice dei ricambi. per questo ci riserviamo il diritto di apportare le correzioni necessarie senza preavviso. La quantità (QT) si riferisce alla quantità necessaria per l'uso specifico; percui la quantità richiesta può essere diversa annotandola accanto ad ogni numero di codice che si vuol ordinare. Nei listini prezzi più recenti è riportata la disponibilità o meno del ricambio. I ricambi che non sono disponibili, possono essere forniti d'occasione: tali ricambi, però, non sono sempre nei nostri listini. I prezzi dei nostri listini sono relativi al prezzo singolo e possono cambiare improvvisamente a seconda che aumenti o cali il prezzo di acquisto presso i nostrii fornitori. L'I.V.A. è indicata nel listino prezzi. I codici dell'articolo si compongono di sei cifre; le prime tre indicano la natura del pezzo: ed es. 161 si riferisce ai dadi; 162 alle viti; 163 agli spessori. Lo stato del ricambio viene riportato nel listino prezzi e può essere riconosciuto dal numero. I codici che seguono, si trovano nel listino accanto ai prezzi e non possono essere forniti come nuovi: SH: d'occasione. - EX: fornito su base di scambio ed una cauzione grava sul prezzo. - NA: per il momento non più disponibile. - LH: sinistro. - RH: destro (visti dal punto di vista del guidatore). LHD: guida a sinistra. - RHD: guida a destra.- A/R: come richiesto (la quantità può variare a seconda dell'applicazione). -USE: il numero di articolo è stato sostituito dal numero indicato.

ORDINI

Accettiamo ordini fatti via fax, lettra, telefono oppure in negozio; nel caso utilizzasse il nostro modulo d'ordine, tenga presente quanto segue:

- indichi sempre il suo codice Cliente, il nome, l'indirizzo, il numero di telefono di casa o del lavoro, il numero di fax, il codice fiscal od il numero di partita I.V.A. per le Ditte;
- specifichi nel caso l'indirizzo per la consegna fosse diverso;
- completi i dati identificativi della sua vettura: marca, tipo, anno di costruzione, ecc.
- usi soprattutto i nostri codici di articolo; ciò rende più facile e sicura l'evasione del Suo ordine.
- indichi sempre la quantità a Lei necessaria e scriva la descrizione dei ricambi.
- indichi la modalità di pagamento; se prevede l'uso di carta VISA, MASTERCARD, metta tutto il codice completo (16 cifre) anche della scadenza. Tutti questi dati vengono inseriti nel sistema computerizzato per la corretta evasione del Suo ordine, perciò, modificare un ordine già trasmessoci, provoca grave disordine nei nostri sistemi causando la maggiore possibilità di sbagliare e ritardare l'evasione dell'ordine stesso. **Perciò Le chiediamo di controllare bene tutti i dati prima di trasmetterceli:** ci aiuterà a fornirLe i ricambi nei modi e nei tempi corretti. Siamo certi del Suo aiuto, perciò La ringraziamo.

PAGAMENTI

Carta di credito: al momento, accettiamo esclusivamente carta di credito del circuito VISA, MASTERCARD. E' pregato di indicare correttamente il numero di conto, la scadenza, il codice, ed il nome del "titolare" della carta.

Banca: evaso l'ordine Le faremo la fattura e Le comunicheremo l'importo esatto in modo che possa spedirci un assegno intestato esclusivamente ad ANGLO PARTS SRL- Treviso allegando une lettera coi Suoi estremi; sarà nostra premura inviarLe immediatamente il materiale.

SPEDIZIONE

Nazionale: recapitiamo il materiale prevedendo il pagamento "in contrassegno" nel caso non sia titolare di carta di credito; il costo del trasporto (corriere UPS) e del diritto di C.O.D. saranno computati nella fattura.

Internazionale: recapitiamo il materiale utilizzando UPS accettando esclusivamente pagamenti con carta di credito VISA, MASTERCARD. Cerchiamo di imballare il materiale nel modo migliore al fine di evitare rotture o danni: tuttavia, nel caso dovesse succedere, Anglo Parts SRL non si ritiene responsabile di spedizioni danneggiate o perse durante il trasporto in quanto, nel caso di responsabilità del trasportatore dovrà dare comunicazione scritta entro tre giorni dal ricevimento della merce. Tutto il matriale di imballagio deve essere conservato per l'eventuale verifica. Il trasporto di parti in vetro non può essere assicurato, pertanto il materiale viaggia a rischio del Cliente.

RICEVIMENTO DELLA MERCE

E'pregato di verificare, al ricevimento della merce, che i sigilli, il nastro adesivo e la confezione non siano rotti o manomessi. In caso di danneggiamento o perdita dovrà annotare sulla bolla di cosegna quanto è successo ovvero le condizioni e la quantità della merce **prima di fimare** per ricevuta. ConserVi la copia del documento di trasporto e presenti immediatamente un reclamo al trasportatore. ConserVi in ogni caso l'imballo finchè i problemi non saranno stati risolti. Il personale di Anglo Parts controlla la merce sia durante la raccolta che durante l'imballaggio per ridurre la possibilità di sbagliare; **anche il Cliente, nel momento del ricevimento della merce, dovrà fare l'ultimo controllo.** Verifichi se ha ricevuto tutto il materiale ordinato e se tutti i pezzi mecchanici funzionano. Non aspetti di verificare i pezzi al momento del montaggio e, in caso di difetti o errori, ci scriva entro tre giorni dal ricevimento della merce.

GARANZIA

I ricambi per macchine d'epoca vengono prodotti in piccole quantità da ditte che applicano i prezi migliori: Anglo Parts cerca essa stessa di controllare la merce anche se non può farlo per ogni singolo pezzo. **Prima del montaggio, quindi, il cliente deve fare l'ultimo controllo.** Soprattutto bisogna verificare che i pezzi meccanici siano in perfetto stato. Il periodo di garanzia **inizia a far data dalla fatturazione** e non dal montaggio. I nostri ricambi hanno una garanzia normale e ragionevole quindi eventuali reclami comportano solo la rifusione del valore del pezzo guasto che ci verrà restituito. Non copre i costi del montaggio, del trasporto, il difetto di un ricabio relativo, il danno a seguito di un montaggio scorretto o di pezzi che vengono usati per competizioni o rally. Nel caso di reclami coperti da garanzia, i pezzi devono esserci restituiti al negozio. A tal proposito tenga presente che: il valore deve essere maggiore di 7,5 Euro, i costi di rispedizione devono esserci anticipati, tutti i pezzi devono essere rispediti puliti e ben imballati. Non siamo più responsabili dopo che Lei, o un'altra persona, abbia smontato un pezzo. Una volta ricevuti i pezzi, la casa madre decide se si tratta di un difetto di fabbrica oppure dovuto all'installazione scorretta; la verifica avviene quando avremo ricevuto i pezzi guasti completi ed interi. I pezzi danneggiati dal trasporto o nell'imballo non vengono presi in considerazione.

RISPEDIZIONE

Un errore da parte Sua nell'ordinazione, una restituzione in sequito ad un Suo errore comporta, nell'accettazione da parte nostra, di una diminuzione del 15% sul valore del ricambio con un valore minimo di 7,5 Euro, quale copertura di costi generali. Nella restituzione di prodotti venduti al metro, di cuscinetti, pistoni, di anelli pistoni, di decorazioni, di interni di tappezzeria, di pannelli, di selleria o di ogni ricambio la cui installazione sia parzialmente avvenuta, deve sempre allegare una copia della fattura entro 30 giorni dalla sua data; dovrà pagarci in anticipo i costi della rispedizione, in quanto Anglo Parts non potrà rimborsare questi costi o i costi dell'imballo del mittente e la provvigione che abbiamo dovuto pagare all'organizzazione che cura la gestione della carta di credito. Il rimborso sarà constituito da un "Gift Certificate" che é un buono di acquisto.

SUPPLEMENTO

Sul prezzo di ricambi che vengono forniti su base di scambio, grava un sovrapprezzo (surcharge) che verrà indicato sui listini prezzi vicino ai codici articolo relativi e sarà fatturato in attesa della rispedizione della vecchia unità; questo sovrapprezzo sarà restituito dopo aver ricevuto e verificato il buono stato e la rigenerabilità del pezzo. Contestualmente alla Sua spedizione è pregato di allegare sempre una copia della fattura ed una lettra completa di tutti i Suoi dati ovvero: nome, cognome, indirizzo, numero telefono, data della spedizione, descrizione dei prodotti, il supplemento incluso; questo in tre copie per l'esportazione e cioè una per Lei, una esterna al pacchetto ed una all'interno. La spedizione ci verrà pagata anticipatamente. Al ricevimento da parte nostra dei pezzi verificheremo immediatamente se l'imballo è integro o danneggiato, il corrispondimento del pezzo all'articolo vecchio (originale). A titolo esemplifficativo diremo che non deve spedirci il motore di un tergicristallo MGA al posto di un motore tergicristallo TD; ancora se ci invia un motore con l'albero motore rotto, noi Le rimborseremo il valore del motore detratto il valore dell'albero.

BACK ORDERS

I prodotti che non abbiamo in scorta al momento dell'ordine, vengono messi in "back order" ovvero Le comunicheremo per lettra quando saremo in grado di fornirLe il pezzo di nuovo; questo pezzo viene riservato per Lei per una durata di 15 giorni a partire dal giorno di spedizione della lettera da parte nostra. NEL CASO NON RICEVESSIMO Sue notzie entro questo tempo, il pezzo potrà essere dato ad un altro cliente. Quando ordina, nel modulo, può specificare "no back order" o può chiederci di annullare i precedenti. Nel caso un pezzo in "back order" non fosse disponibile, Le verrà comunicato. Nel caso desideri un pezzo d'occasione, è pregato di specificarlo e noi faremo del nostro meglio per soddisfare le Sue richieste.

© Van Gestel B&C 2006

Location of unit serial numbers

Please note: In order to avoid confusions in our application column, we will call the "SPRITE MK I (AN5)", "FROG" instead. This is officially incorrect, but it will allow us to save space.

Model	Year	cc	Engine Prefix	chassis numbers Begin	End
Sprite MK I	Apr. 58 - Feb. 61	948	9C	HAN-5-501	HAN-5-50116
Sprite MK II	Feb. 61 - Sep. 62	948	9CG	HAN-6-101	HAN-6-24731
Sprite MK II	Sep. 62 - Jan. 64	1098	10CG	HAN-7-24732	HAN-7-38828
Midget MK I	Feb. 61 - Sep. 62	948	9CG	GAN-1-101	GAN-1-16183
Midget MKI	Sep. 61 - Jan. 64	1098	10CG	GAN-2-16184	GAN-2-25787

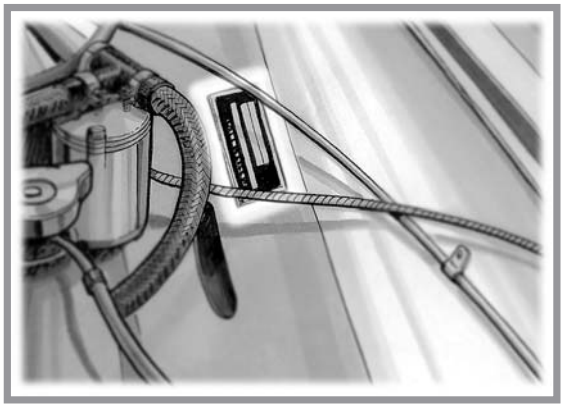

The **Car Number** is stamped on a plate secured to the left-hand inner wheel arch valance under the bonnet.

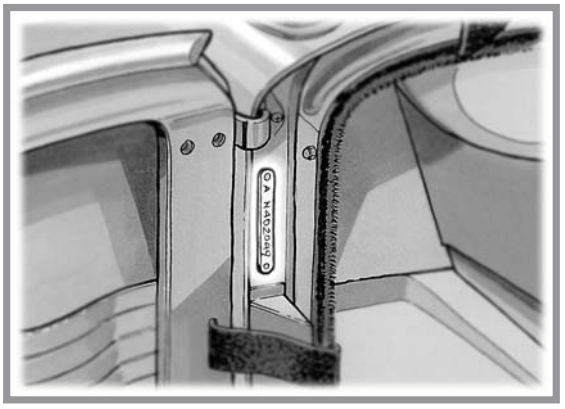

The **Body Number** is stamped on a plate secured to the left-hand front door pillar.

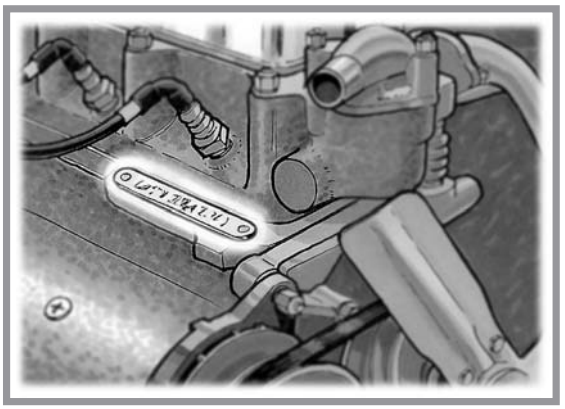

The **Engine Number** is stamped on a plate secured to the right-hand side of the cylinder block above the dynamo.

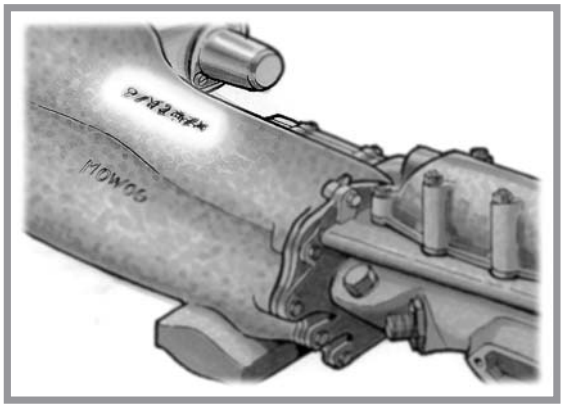

The **Gearbox Number** is stamped on the top of the gearbox casting.

The **Rear Axle Number** is stamped on the front of the left-hand rear axle tube adjacent to the spring anchorage.

© Van Gestel C&B 1997

Major caracteristics

AUSTIN HEALEY SPRITE MK I

Made from April 1958 up to February 1961. Mostly called "Frog Eye", the Americans say "Bugeye Sprite". Most special are: Bonnet and front wings are one piece, no external boot access, 1/4 elliptic 15-leaf rear spring and 948cc A-type engine.

AUSTIN HEALEY SPRITE MK II

Made from February 1961 up to January 1964. The most important changes are: Conventional bonnet, exterior boot lid and later from September 1962 a 1098cc engine and the introduction of disc brakes at front.

MG MIDGET MK I

Made from February 1961. Started with a 948cc engine and changed to a 1098cc in September 1962 together with the introduction of disc brakes at front. Last Midget MK I was built in January 1964 (chassis # GAN-2-25787).

© Van Gestel C&B 1997

Index

A
Accelerator pedal 24
Accelerator cable 24
Air control cables 42
Air filters 24-69-70
Air filters K&N 69-70
Air hoses 42
Air intake manifold 19-69-70
Alloy rocker cover 16-66
Alloy wheels 84
Antenna, radio 82-87
Anti freeze 76
Anti roll bar 55
AUTO GLYM products 84-86
Axle, rear 36

B
Badge bar 50
Badges 54-56-57-62-92-93-99
Battery 45
Body fasteners 93
Body panels 52->57
Body care & protection products 84-86-102
Body repair manual 52->57
Bonnet, Midget 56
Bonnet, Sprite MK1 54
Bonnet, Sprite MK2 56
Bonnet straps 78
Books 100-101
Boot struts 85
Brake bleeding kit 41-97
Brake disc 40
Brake disc conversion 9" 74
Brake drum 41-74
Brake fluid 41-74-77
Brake hoses, competition 74
Brake hoses, standard 39
Brake master cylinder 38
Brake pedal, rubber 38
Brake pipes 39
Brake servo unit 74
Brake shoe set 41
British flag 89
Brookland aero screen 59-89
Bumpers 58

C Cable
accelerator 24
Cable, air control 42
Cable, choke 24
Cable, handbrake 39
Cable, starter 45
Caliper 40
Camshaft 13-66
Camshaft kit, KENT 66
Car cover, indoor 83
Carburetor adjusting tools 25-94
Carburetor assembly 25-69-70
Carburetor books 25-69-70-100
Carburetor dashpot 70
Carburetor heat shield 24-70
Carburetor rebuild kits 25
Carburetor synchronizer 25-94
Carburetor SU 70
Carburetor Weber 69
Carpet set 65
CASTROL products 76
Chassis n° info 9
Chassis n° plates 99
Choke cable 24
Cigar lighter 85
Cleaning products 84-86
Clock 81
Clutch 28
Clutch alignment tool 28-97
Clutch master pump 38
Clutch pipe 28
Clutch slave cylinder 28
Cockpit surround 61
Coil, ignition 22
Coil spring 32-72
Condensator 22
Connecting rod 13
Connector, electrical 45
Contact set, ignition 22
Conversion gasket set 12-15
Cooling 21
Cooling fan kit, KENLOW 71
Cooling, oil radiator 71
Crankshaft 13
Crown wheel & pinion 36
Cylinder head assembly 12-17-67
Cylinder head gasket set 12-17
Cylinder head nut 14-17

D
Dash badges 61
Dash grab handle 61
Dash instruments 81

D continued
Dash recovering material, see panel kit, page 65
Dash switches 47-79
Decal &ID plates 99
Differential 36
Disc brake 40-74
Distributor 22-67
Distributor cap 22-67
Distributor, improvements 67
Distributor driving dog 14
Dynamo 44
Dynamo mounting 19
Door & fittings 60
Door draught excluder seal 60
Door panels, trim 65
Door, side windows 60
Door lock 60
Drip pan, oil 76
Drive shaft 31
Drivers accessories 82-83-85-87-88-89-92-93
Drum brakes 41
Drum brakes, aluminium 74
Duster 86

E
Electrical cooling kit 71
Electrical connector 45
Electronic ignition kit 67
Emblems 54-55-56-57-61-62-92-93-99
Engine assembly 12
Engine bearings 13
Engine capacities, oil 15
Engine drain plug 15
Engine gasket sets 12-15-17
Engine lifting bracket 16
Engine mountings 19
Engine oil seals 14-15
Engine plate 19-71
Engine steady kit 71
Engine tuning parts 66
Exhaust system 20

F
Fan 21
Fan belt 21
Fasteners, hood 63
Fasteners, kits 93
Filter, air 12-24-69-70
Filter, oil 12-18-71
Flasher unit 47
Floor mats 65
Floor panel 53
Flywheel 14
Fog lamp 50-80
Freeze, anti 76
Freeze plug 14
Front bumper 55-58
Front suspension 32-33
Front suspension improvements 32-33-72
Fuel filter 68
Fuel gauge 23
Fuel pressure regulator 68
Fuel pipes 23
Fuel pump, electrical 68
Fuel pump, standard 23
Fuel pump, repair kit 23
Fuel tank 23
Fuel tank filler cap 23-68
Fuel tank sending unit 23
Fuse box 47
Fuses 47

G
Gasket kits 12-15-17-29
Gasket remover 76
Gasket sealant, Coctite 76
Gauge, tire pressure 84
Gauges 48-79-81
Gauges repair service 48
Gear shift knobs 29-83
Gearbox 29
Gearbox 5 speed 75
Gearbox close ratio 75
Glues 77
GNK spark plug 67
Greases 77
Grill Midget 57
Grill Sprite MK1 54
Grill Sprite MK2 57
Grommet, body 62
Grommet, harness 45
Grommet, kit 45-48
Grose jet 25

H
Handbrake 39
Hard top, Sprite MK1 54
Harness, wiring 45
Hazard switch 82

H continued
Head lamp 49
Headlamp, switch 47
Head rest 78
Heat shield 24-70
Heater installation 42
Heater cable 42
Heater hoses 42
Hood, soft top 63
Horn 48
Horn switch 47
Hub cap 43

I
ID Plates and stickers 99
Identification plates 99
Ignition coil 22-67
Ingition H.T. wires 22-67
Ignition improvements 67
Ignition switch 47
Ignition system 22-67
Ignition wire kit 22-67
Instruments 81
Interior mirror 61
Interior panel kit 65

J
Jack assembly 43
Jacket patches 93

K
K & N Filters 69-70
KENT Camshaft kit 66
Key fob 93
Key, MG logo 85
King Pin bush reaming tool 33-94
King Pin kit 32
Knock Off 43
Knock Off wrench 96

L
Lamp proctection 80
Lamps 49-50-51-80-82
Lamps, fog 50-80
Lamps, interior 82
Lamps, number plate 51
Lamps, spot 50-80
Leaf spring 37
Leaf spring, upgraded 73
Leather steering wheel 35-83
Luggage racks 55-57-90

M
Main bearing set 13
Manifold, exhaust 20
Manifold, inlet 19-69-70
Map light 82
Master cylinder 38
Mirrors 61-91
Moulding, body 56
Mud Flaps, MG 83
Mugs 94

N
Negative earth convertor 82
Nut & screw sets 95
Nut, wheel 43-84

O
Oil, capacities 15
Oil, CASTROL 76
Oil Cooler 71
Oil cooler guard 71
Oil cooler hoses 71
Oil cooler thermostat 71
Oil filter 12-18-71
Oil filter, spin-on 71
Oil, PENRITE 76
Oil pressure gauge 48-81
Oil pump 15
Oil temerature gauge 81

P
Paint lists 102
Panel Kit, interior 65
Part nr lists (how to use!) 103
Pedal pad 38
Pedal return spring 38
PENRITE oils 76
Piston set 13
Plates 100
Pushrod 16

R
Racing mirror 61-91
Racing windscreen 59-89
Race & rally safety products 78

R continued
Radiator 21
Radiator hoses 21
Rally instruments 79-81
Rear axle 36
Rear bumper 55-58
Rocker assembly 16-66
Rocker shaft 16
Rod bearing set 13
Roll over bar 78
Roller rocker assembly 16-66

S
Safety products 78-85
Screw kits 95
Seat assembly 64-78
Seat covers 64
Seat frame 64
Seat racing 78
Seat belts 78
Servo unit, brake 74
Shock absorbers 32-37-72-73
Shock absorber conversion kits 72-73
Shock absorber oil 32-37-72-73
Shock absorber valves 72-73
Side moulding 56
Side screens 60
Sill, inner 53
Sill, outer 53
Sill, stainless steel 83
Slave cylinder 28
Spare wheel clamp 43
Spare wheel cover 65
Spare wheel strap 43
Spark Plug 12-17-67
Speedometer & cable 48-81
Spinner, knock-off 43
Spring, front 32-72
Spring, pan, lowering kit 33
Spring, rear 37-73
Starter 44
Starter switch 47
Steering arm 32
Steering column 35
Steering rack 35
Steering wheel 35-83
Stone gaurd set 80
SU Carburettor 25-26-27-70
Suspension, front 32-33-72
Suspension, improvements 72
Suspension, rear 37-73
Switches 47-79
Switch panel 79

T
Tacho cable 48
Tacho reduction box 44-48
Tank, fuel 23
Tappet 38
Temperature gauge 48-81
Thermostat 12-17
Timing chain 14-66
Tyre accessories & care 84
Tonneau cover 63
Tools 43 94->96-98
Tool bag 43
Trim kit 65
Trim screws 65-95

V
Vacuum hose, servo 74
Vacuum unit 22
Valves, cylinder head 17
Valves, shock absorber 33-72-73
Voltage guage 81
Voltage regulator 47

W
Warning lights 47-79
Washer bottle 46-82
Water pump 21
Waxoil products 102
WEBER 69
Wheel 43-84
Wheel cylinder 40-41
Wheel nut 43-84
Windscreen, glass 59
Windscreen, racing 59-89
Windscreen, side 60
Wiper arm 46
Wiper blade 46
Wiper motor 46
Wiper switch 47
Wire wheel & conversion 43
Wiring harness 45
Workshop manual 98-99
Wringer, chamois 87

© Van Gestel C&B 1997

Engine, most important parts

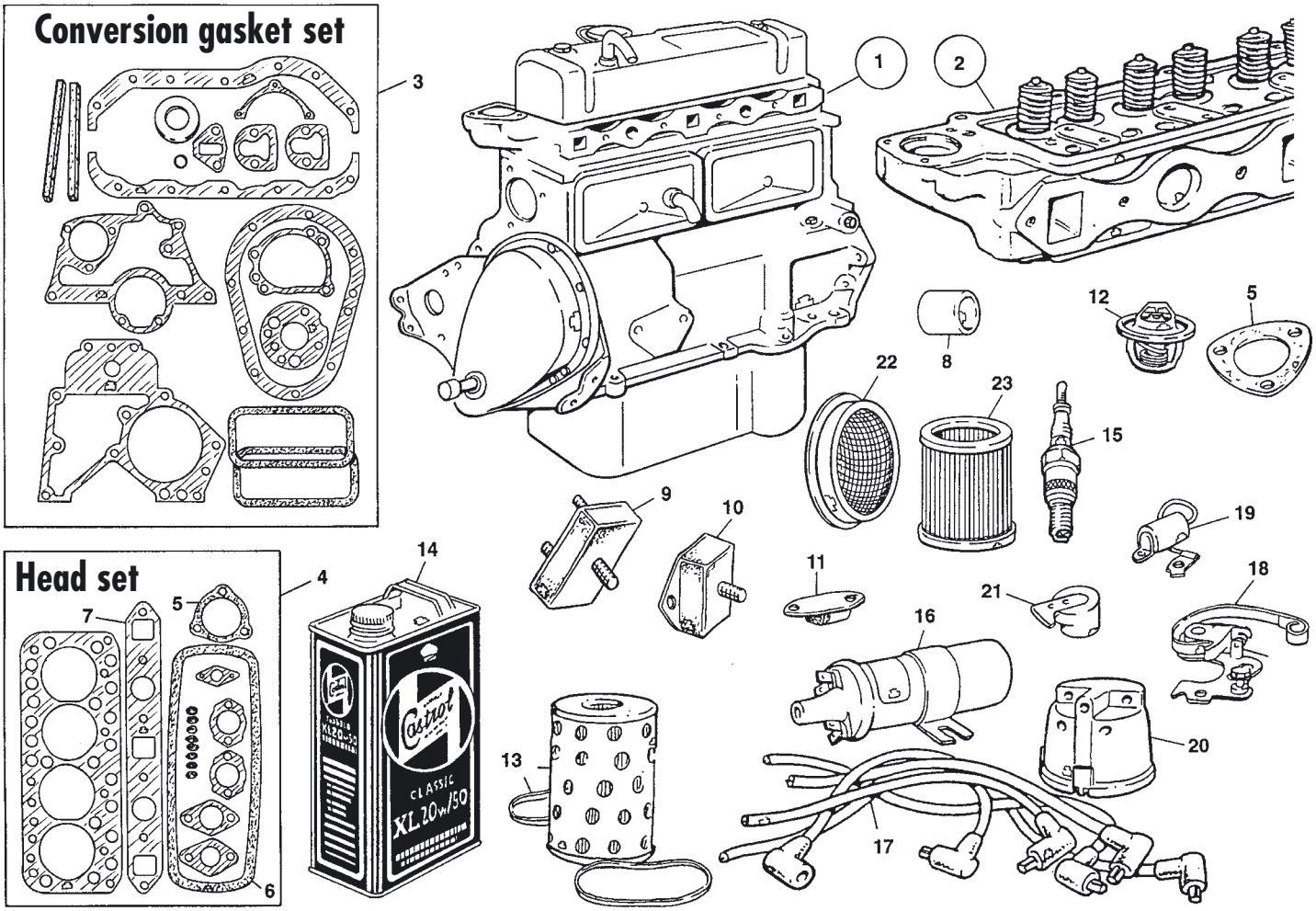

ILL N°	PART N°	QTY	DESCRIPTION	APPLICATION
1	**010.048**	**1**	948cc Engine assembly, lead free	
	010.420	**1**	948cc Engine assembly, lead free	Stage 2 spec.
	010.049	**1**	1098cc Engine assembly, lead free	
	010.421	**1**	1098cc Engine assembly, lead free	Stage 2 spec.
2	**012.358**	**1**	948cc Cylinder head, lead free	29.4mm inlet
	012.668	**1**	948cc Cylinder head, lead free	Stage 2
	012.357	**1**	1098cc Cylinder head, lead free	31mm inlet
	012.669	**1**	1098cc Cylinder head, lead free	Stage 2
3	**016.256**	**1**	Conversion gasket set	Bottom
4	**016.255**	**1**	Head gasket set, 1.1/8" carb.	Sprite MK1
	016.173	**1**	Head gasket set, 1.1/4" carb.	Sprite MK2,
	016.173	**1**	Head gasket set, 1.1/4" carb.	Midget MK1
5	**016.014**	**1**	Gasket, thermostat	
6	**016.168**	**1**	Gasket, rocker cover	
7	**016.169**	**1**	Gasket, manifold	
8	**011.127**	**1**	Spigot bearing, crankshaft-rear	
9	**011.129**	**2**	Engine mounting	
10	**027.068**	**2**	Gearbox mounting	

ILL N°	PART N°	QTY	DESCRIPTION	APPLICATION
11	**027.069**	**1**	Gearbox steady mounting	
12	**012.013**	**1**	Thermostat 74øC	Summer
	012.057	**1**	Thermostat 82øC	Standard
	012.085	**1**	Thermostat 88øC	Winter
13	**011.130**	**1**	Oil filter & seal	
14	**300.522**	**1**	4.5 L. Castrol Classic	engine oil
	300.501	**1**	5 L. Penrite Classic	engine oil
15	**012.005**	**4**	Spark plug	
16	**081.194**	**1**	Coil, screw-in HT lead	
	081.001	**1**	Coil, push-in HT lead	
17	**081.003**	**1**	HT Lead kit with modern end caps	
18	**081.016**	**1**	Contact set	
19	**081.017**	**1**	Condensor	
20	**081.018**	**1**	Distributor cap	
21	**081.020**	**1**	Rotor arm	
22	**101.380**	**1**	Front air filter, 1.1/8"	Sprite MK1
	101.381	**1**	Rear air filter, 1.1/8"	Sprite MK1
23	**101.127**	**2**	Air filter element	all 1.1/4"

© Van Gestel C&B 1997

Pistons, crankshaft & bearings

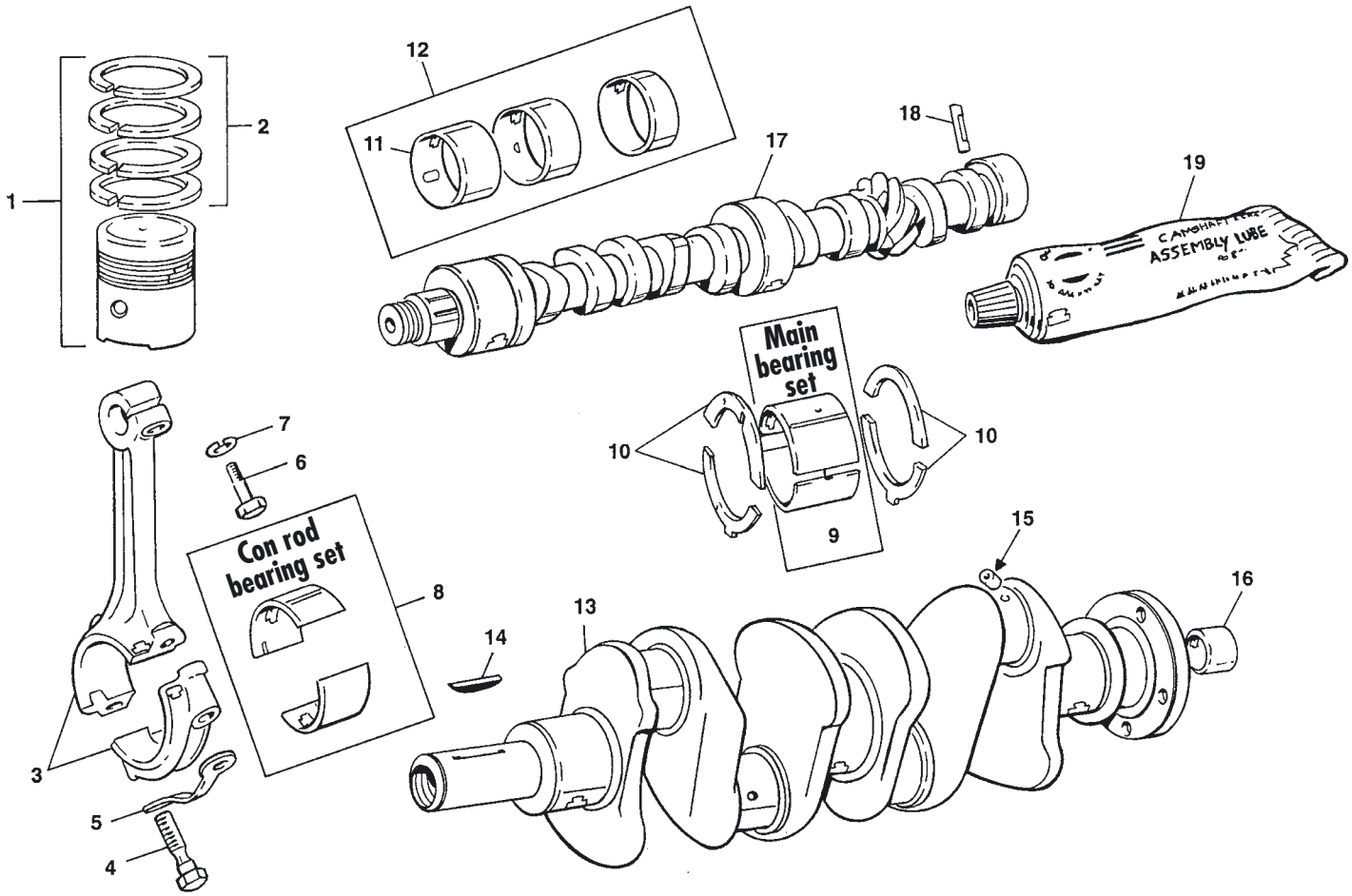

ILL N°	PART N°	QTY	DESCRIPTION	APPLICATION
1	**014.360**	**1**	Piston set, STD	948cc 62.928mm
	014.362	**1**	Piston set, +0.020"	948cc
	014.363	**1**	Piston set, +0.030"	948cc
	014.364	**1**	Piston set, +0.040"	948cc
	014.366	**1**	Piston set, +0.060"	948cc
	014.280	**1**	Piston set, STD	1098cc 64.567mm
	014.282	**1**	Piston set, +0.020"	1098cc
	014.283	**1**	Piston set, +0.030"	1098cc
	014.284	**1**	Piston set, +0.040"	1098cc
	014.286	**1**	Piston set, +0.060"	1098cc
2	**014.530**	**1**	Ring set, 948cc, STD	62.928mm bore size
	014.532	**1**	Ring set, 948cc, +0.020"	
	014.533	**1**	Ring set, 948cc, +0.030"	
	014.534	**1**	Ring set, 948cc, +0.040"	
	014.536	**1**	Ring set, 948cc, +0.060"	
	014.390	**1**	Ring set, 1098cc, STD	
	014.392	**1**	Ring set, 1098cc, +0.020"	
	014.393	**1**	Ring set, 1098cc, +0.030"	
	014.394	**1**	Ring set, 1098cc, +0.040"	
	014.396	**1**	Ring set, 1098cc, +0.060"	
3	**013.328**	**2**	Con rod, 1 & 3	948cc
	013.329	**2**	Con rod, 2 & 4	948cc
	013.330	**2**	Con rod, 1 & 3	1098cc
	013.331	**2**	Con rod, 2 & 4	1098cc
4	**162.881**	**8**	Big end bolt	948cc
	165.059	**8**	Big end bolt	1098cc
5	**174.041**	**4**	Lock tab plate	
6	**162.002**	**4**	Clamp bolt	
7	**164.002**	**4**	Washer, spring	
8	**015.190**	**1**	Con rod bearing set, STD	41.285-41.298mm
	015.191	**1**	Con rod bearing set, .010"	- 0.254mm
	015.192	**1**	Con rod bearing set, .020"	- 0.508mm
	015.193	**1**	Con rod bearing set, .030"	- 0.762mm
	015.194	**1**	Con rod bearing set, .040"	- 1.016mm
	015.196	**1**	Con rod bearing set, .060"	- 1.524mm

ILL N°	PART N°	QTY	DESCRIPTION	APPLICATION
9	**015.200**	**1**	Main bearing set, STD 948cc	44.463-44.475mm
	015.201	**1**	Main bearing set, .010" 948cc	- 0.254mm
	015.202	**1**	Main bearing set, .020" 948cc	- 0.508mm
	015.203	**1**	Main bearing set, .030" 948cc	- 0.762mm
	015.204	**1**	Main bearing set, .040" 948cc	- 1.016mm
	015.170	**1**	Main bearing set, STD 1098cc	44.463-44.475mm
	015.171	**1**	Main bearing set, .010" 1098cc	- 0.254mm
	015.172	**1**	Main bearing set, .020" 1098cc	- 0.508mm
	015.173	**1**	Main bearing set, .030" 1098cc	- 0.762mm
	015.174	**1**	Main bearing set, .040" 1098cc	- 1.016mm
	015.176	**1**	Main beauing set, .060" 1098cc	- 1.524mm
10	**013.286**	**1**	Thrust washer set, STD 948cc	2.34mm thickness
	013.287	**1**	Thrust washer set, +.127mm 948cc	2.46mm thickness
	013.325	**1**	Thrust washer set, STD 1098cc	2.34mm thickness
	013.524	**1**	Thrust washer set, +.076mm 1098cc	2.41mm thickness
	013.525	**1**	Thrust washer set, +.254mm 1098cc	2.59mm thickness
11	**015.199**	**1**	Front cam bearing	948cc 9C prefix
12	**015.205**	**1**	Cam bearing kit	948cc 9CG prefix only
	015.205	**1**	Cam bearing kit	1098cc
13	**013.411**	**1**	Reground crankshaft	948cc
	013.371	**1**	Reground crankshaft	1098cc
14	**172.273**	**1**	Key	
15	**015.016**	**A/R**	Oil restrictor	
16	**011.127**	**1**	Spigot bearing	
17	**013.522**	**1**	Camshaft	948cc 9C prefix
	013.523	**1**	Camshaft	948cc 9CG prefix
	013.523	**1**	Camshaft	1098cc
18	**013.527**	**1**	Oil pump drive pin	
19	**330.060**	**1**	40 Gr. Assembly lube for camshaft, cam followers and push rod tips.	

© Van Gestel C&B 1997

Engine parts, timing wheel, etc.

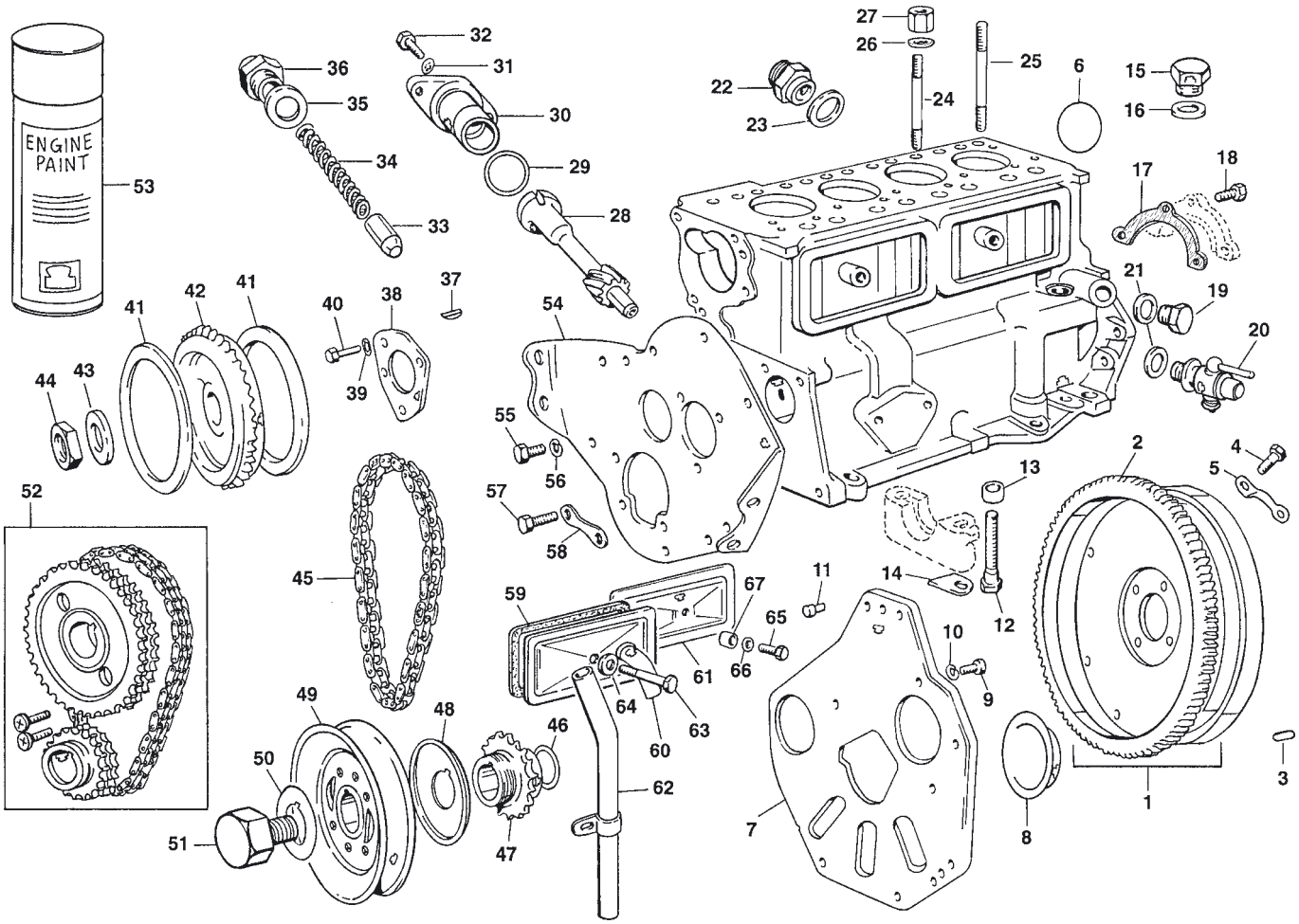

ILL N°	PART N°	QTY	DESCRIPTION	APPLICATION
1	**011.427**	**1**	Flywheel assembly,1.170" thick 948cc	
	011.727	**1**	Flywheel assembly 0.910" thick 1098cc	
2	**011.426**	**1**	Starter ring gear	948cc 233 mm I.D.
	011.087	**1**	Starter ring gear	1098cc 236 mm I.D.
3	**172.002**	**2**	Dowel, flywheel	
4	**162.997**	**4**	Bolt, flywheel	
5	**174.073**	**2**	Lock tab	
6	**011.001**	**4**	Core plug	
7	**011.413**	**1**	Engine back plate	948cc
	011.731	**1**	Engine back plate	1098cc
8	**011.736**	**1**	Cover, oil pump	
9	**162.045**	**7**	Screw	
10	**164.002**	**7**	Washer, spring	
11	**011.593**	**1**	Dowel, upper	
	011.272	**1**	Dowel, lower	
12	**165.062**	**6**	Bolt, main bearing cap	
13	**011.728**	**6**	Collar	
14	**174.040**	**6**	Lock tap	
15	**162.945**	**1**	Oil priming plug	
16	**016.418**	**1**	Washer, sealing	
17	**.....**	**1**	Gasket, see page 12	
18	**165.060**	**3**	Screw	
19	**162.001**	**1**	Water drain plug	
20	**061.005**	**1**	Water drain tap	
21	**168.007**	**1**	Washer, sealing	
22	**011.352**	**1**	Union, pressure gauge	
23	**168.095**	**1**	Washer, sealing	
24	**167.144**	**5**	Stud, cylinder head-short	
25	**167.145**	**4**	Stud, cylinder head-long	
26	**164.004**	**9**	Washer, heavy duty	
27	**161.005**	**9**	Nut, cylinder head	
28	**013.019**	**1**	Distributor drive	
29	**168.158**	**1**	'O' Ring	
30	**011.597**	**1**	Retaining sleeve	
31	**164.007**	**1**	Washer, shakeproof	
32	**162.077**	**1**	Screw	
33	**011.123**	**1**	Valve, oil pressure relief	
34	**011.424**	**1**	Spring, standard	
	013.526	**1**	Spring, uprated	

ILL N°	PART N°	QTY	DESCRIPTION	APPLICATION
35	**168.016**	**1**	Washer, sealing	
36	**011.030**	**1**	Cap	
37	**172.006**	**1**	Key, camshaft	
38	**012.269**	**1**	Retaining plate, camshaft	
39	**164.007**	**3**	Washer, shakeproof	
40	**162.077**	**3**	Screw	
41	**013.335**	**2**	Tensioner ring, if fitted	
42	**013.312**	**1**	Cam gear, single chain	
43	**174.004**	**1**	Lock tab	
44	**161.011**	**1**	Nut, camshaft	
45	**013.163**	**1**	Single timing chain	
46	**013.424**	**A/R**	Shim, chain lining	
47	**013.311**	**1**	Crank gear, single chain	
48	**013.541**	**1**	Oil thrower, use with felt seal	up to 04/1960
	013.423	**1**	Oil thrower, use with rubber oil seal, timing cover	from 04/1960
49	**011.512**	**1**	Pulley, crankshaft	
50	**164.003**	**1**	Lock tab	
51	**161.029**	**1**	Bolt, crankshaft	
52	**013.528**	**1**	Duplex gear set, improvement	see page 66
53	**187.107**	**2**	Spray, engine & gearbox paint	grassy green
54	**011.751**	**1**	Front engine plate	948 and early 1098
	011.752	**1**	Front engine plate	most 1098cc engines
55	**162.045**	**2**	Screw	
56	**164.002**	**2**	Washer, spring	
57	**165.061**	**2**	Screw	
58	**174.072**	**1**	Lock tab	
59	**016.006**	**2**	Gasket, cork	early
	016.035	**2**	Gasket, rubber	late type
60	**011.733**	**1**	Cover plate, front	
61	**011.734**	**1**	Cover plate, rear	
62	**011.735**	**1**	Breather pipe	
63	**162.703**	**2**	Bolt, 1.7/8" early type	check length required
64	**016.007**	**2**	Washer, fibre, early	
65	**162.577**	**2**	Bolt, 1.1/8" late type	check length required
66	**011.055**	**2**	Washer, cup late type	
67	**011.054**	**2**	Washer, rubber late type	

© Van Gestel C&B 1997

oilpump, sump, timing cover & info

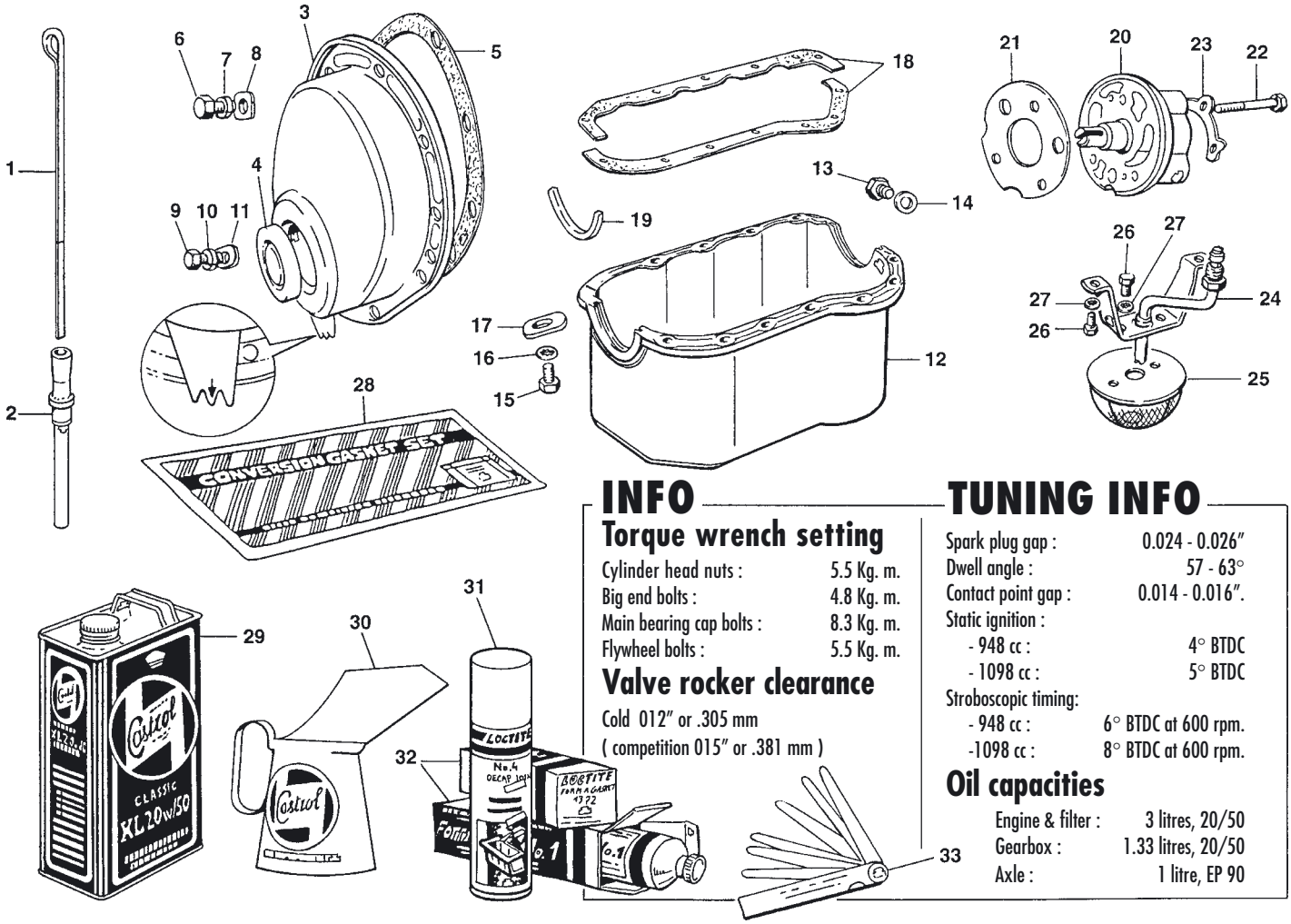

INFO

Torque wrench setting

Cylinder head nuts :	5.5 Kg. m.
Big end bolts :	4.8 Kg. m.
Main bearing cap bolts :	8.3 Kg. m.
Flywheel bolts :	5.5 Kg. m.

Valve rocker clearance

Cold 012″ or .305 mm
(competition 015″ or .381 mm)

TUNING INFO

Spark plug gap :	0.024 - 0.026″
Dwell angle :	57 - 63°
Contact point gap :	0.014 - 0.016″.
Static ignition :	
- 948 cc :	4° BTDC
- 1098 cc :	5° BTDC
Stroboscopic timing:	
- 948 cc :	6° BTDC at 600 rpm.
-1098 cc :	8° BTDC at 600 rpm.

Oil capacities

Engine & filter :	3 litres, 20/50
Gearbox :	1.33 litres, 20/50
Axle :	1 litre, EP 90

ILL N°	PART N°	QTY	DESCRIPTION	APPLICATION
1	**011.730**	**1**	Dipstick	948cc
	011.338	**1**	Dipstick	1098cc
2	**011.345**	**1**	Tube, dipstick	1098cc
3	**011.758**	**1**	Timing cover for FELT seal	early 948cc only
	011.729	**1**	Timing cover for RUBBER seal	
4	**016.003**	**1**	Felt oil seal	948cc to 9C U H37646
	016.004	**1**	Rubber oil seal	
5	**016.322**	**1**	Gasket, timing cover	
6	**162.462**	**6**	Screw 1/4"	
7	**164.012**	**6**	Washer, spring	
8	**163.018**	**6**	Washer, plain	
9	**162.045**	**4**	Screw 5/16"	
10	**164.002**	**4**	Washer, spring	
11	**163.019**	**4**	Washer, plain	
12	**011.732**	**1**	Oil pan, sump	
13	**162.013**	**1**	Plug, oil drain	
14	**168.001**	**1**	Washer, copper	
15	**162.076**	**14**	Screw, sump	
16	**164.007**	**14**	Washer, shakeproof	
17	**163.018**	**14**	Washer, plain	
18	**016.357**	**1**	Pair sump gaskets	
19	**016.171**	**2**	Sump end seal, cork	
20	**013.160**	**1**	Oil pump, slot drive	
21	**016.326**	**1**	Gasket, oil pump	
22	**162.671**	**3**	Bolt, oil pump	
23	**174.038**	**1**	Lock tab plate	
24	**013.529**	**1**	Oil pick-up pipe	948cc
	011.583	**1**	Oil pick-up pipe	1098cc
25	**011.442**	**1**	Strainer, filter	
26	**162.076**	**4**	Screw	
27	**164.007**	**4**	Washer, shakeproof	
28	**016.256**	**1**	Conversion gasket set	
29	**300.522**	**1**	4.5 Litres 20/50 Castrol Classic Oil	for engine & gearbox
	300.501	**1**	5 Litres 20/50 Penrite Classic Oil	for engine for gearbox use 300.111
30	**200.749**	**1**	Castrol green oil can	one quart
31	**198.016**	**1**	Spray, Gasket Remover Removes paper, paint etc.	
	198.037	**1**	Spray, Gasket Glue Use on paper gaskets	
32	**016.269**	**1**	Form-A-Gasket, gasket cement Use on both sides of the gasket or direct on the surfase.	
	198.017	**1**	Form-A-Gasket, high temperature up to 315øC.	
33	**200.711**	**1**	10 Blade Imperial Gauge	

© Van Gestel C&B 1997

Rockers & rocker box

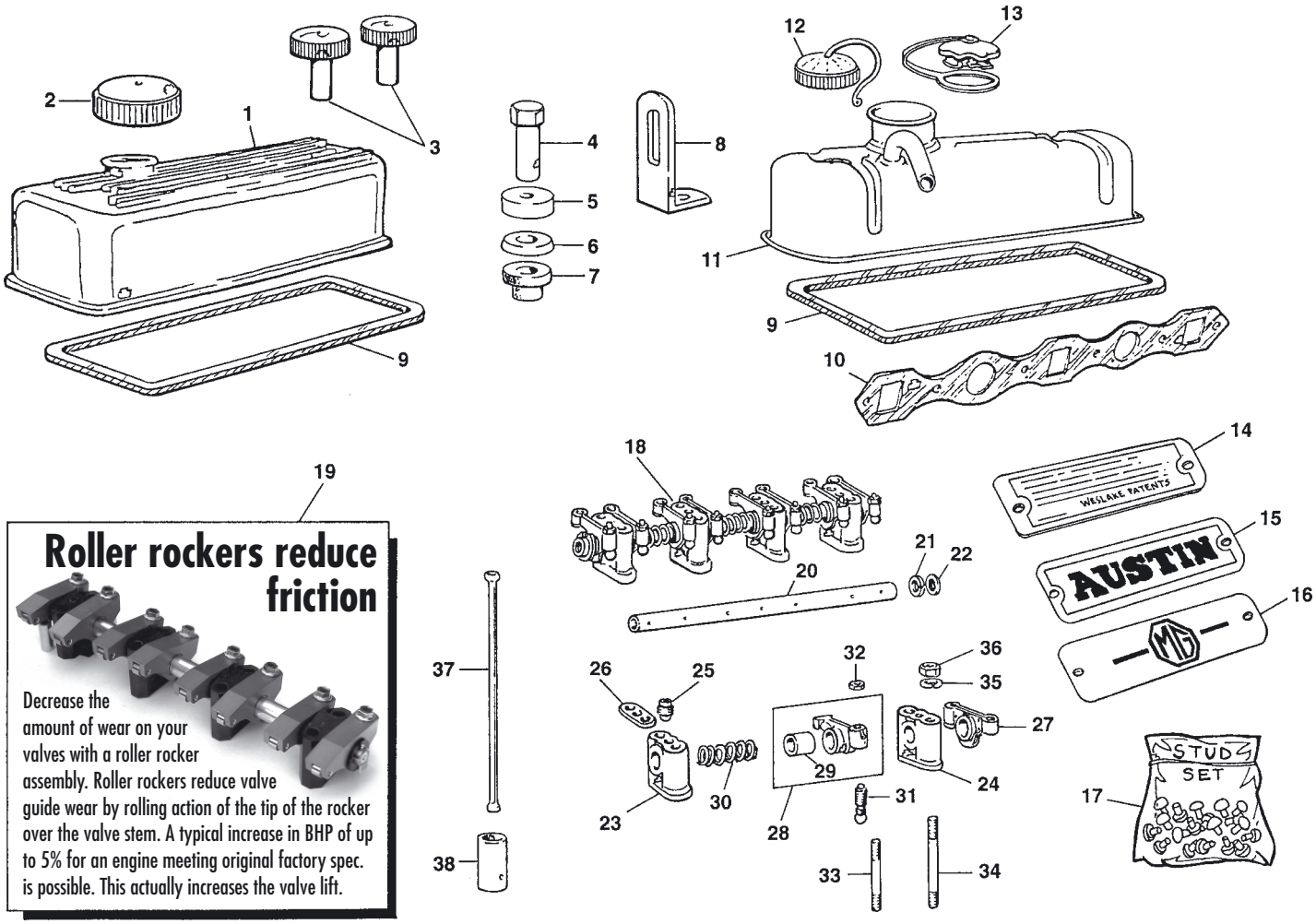

Roller rockers reduce friction

Decrease the amount of wear on your valves with a roller rocker assembly. Roller rockers reduce valve guide wear by rolling action of the tip of the rocker over the valve stem. A typical increase in BHP of up to 5% for an engine meeting original factory spec. is possible. This actually increases the valve lift.

ILL N°	PART N°	QTY	DESCRIPTION	APPLICATION
1	**185.163**	**1**	Polished Aluminium Rocker cover	
	185.663	**1**	Black Aluminium Rocker cover	
	185.669	**1**	Red Aluminium Rocker cover	
	185.670	**1**	Blue Aluminium Rocker cover	
			(More aluminium rocker covers on page 2)	
	185.075	**1**	Chrome filler cap	
	185.672	**1**	Red filler cap	
	185.673	**1**	Yellow filler cap	
3	**141.641**	**1**	Pair knurled chrome plated nuts. For quick release and eacy acess to the rockers.	
4	**012.395**	**2**	Chrome plated nut	
	012.001	**2**	Zinc plated nut	
5	**012.396**	**2**	Spacer, chrome plated	
	012.052	**2**	Spacer, zinc plated	
6	**012.257**	**2**	Cap washer, chrome plated	
	012.002	**2**	Cap washer, zinc plated	
7	**012.003**	**2**	Bush, rubber	
8	**011.197**	**2**	Engine lifting bracket. WARNING ! Remove these BEFORE closing bonnet.	
9	**016.168**	**1**	Gasket, rocker box	
10	**016.169**	**1**	Gasket, manifold	
11	**012.646**	**1**	Rocker box, original	
12	**012.004**	**1**	Metal filler cap & wire	
	012.750	**1**	Filler cap & wire, chrome plated	
13	**012.187**	**1**	Plastic filler cap	
14	**085.019**	**1**	Patent plate	
15	**085.044**	**1**	'AUSTIN' Name plate	
16	**085.018**	**1**	'MG' Name plate	
17	**152.109**	**1**	Stud set, 10 pieces	

ILL N°	PART N°	QTY	DESCRIPTION	APPLICATION
18	**012.147**	**1**	Rocker shaft assembly, pressed steel Check possition of pedestal/oil feed!	
	012.670	**1**	Rocker shaft assembly, casted type Check possition of pedestal/oil feed!	
19	**012.665**	**1**	Roller rocker shaft assembly Check posittion of pedestal/oil feed!	
20	**012.388**	**1**	Rocker shaft	
21	**164.026**	**2**	End spring washer	
22	**012.532**	**2**	End washer	
23	**012.523**	**3**	Pillar, pedestal	
24	**012.524**	**1**	Pillar, pedestal with oil hole	
25	**012.023**	**1**	Locating screw	
26	**174.074**	**1**	Lock plate	
27	**012.647**	**8**	Pressed steel rocker	
28	**012.648**	**8**	Casted rocker	
29	**012.359**	**8**	Bush for casted rocker	
30	**012.531**	**3**	Spacer spring	
	012.649	**3**	Solid spacer	for special tuning
31	**012.529**	**8**	Adjusting screw	for pressed rocker
	012.527	**8**	Adjusting screw	for casted rocker
32	**161.493**	**8**	Adjusting nut	for pressed rocker
	161.008	**8**	Adjusting nut	for casted rocker
33	**167.143**	**2**	Stud, rocker shaft-short	
34	**167.142**	**2**	Stud, rocker shaft-long	
35	**164.002**	**4**	Washer, spring	
36	**161.002**	**4**	Nut	
37	**013.342**	**8**	Push rod	
38	**013.036**	**8**	Cam follower	

© Van Gestel C&B 1997

Cylinder head

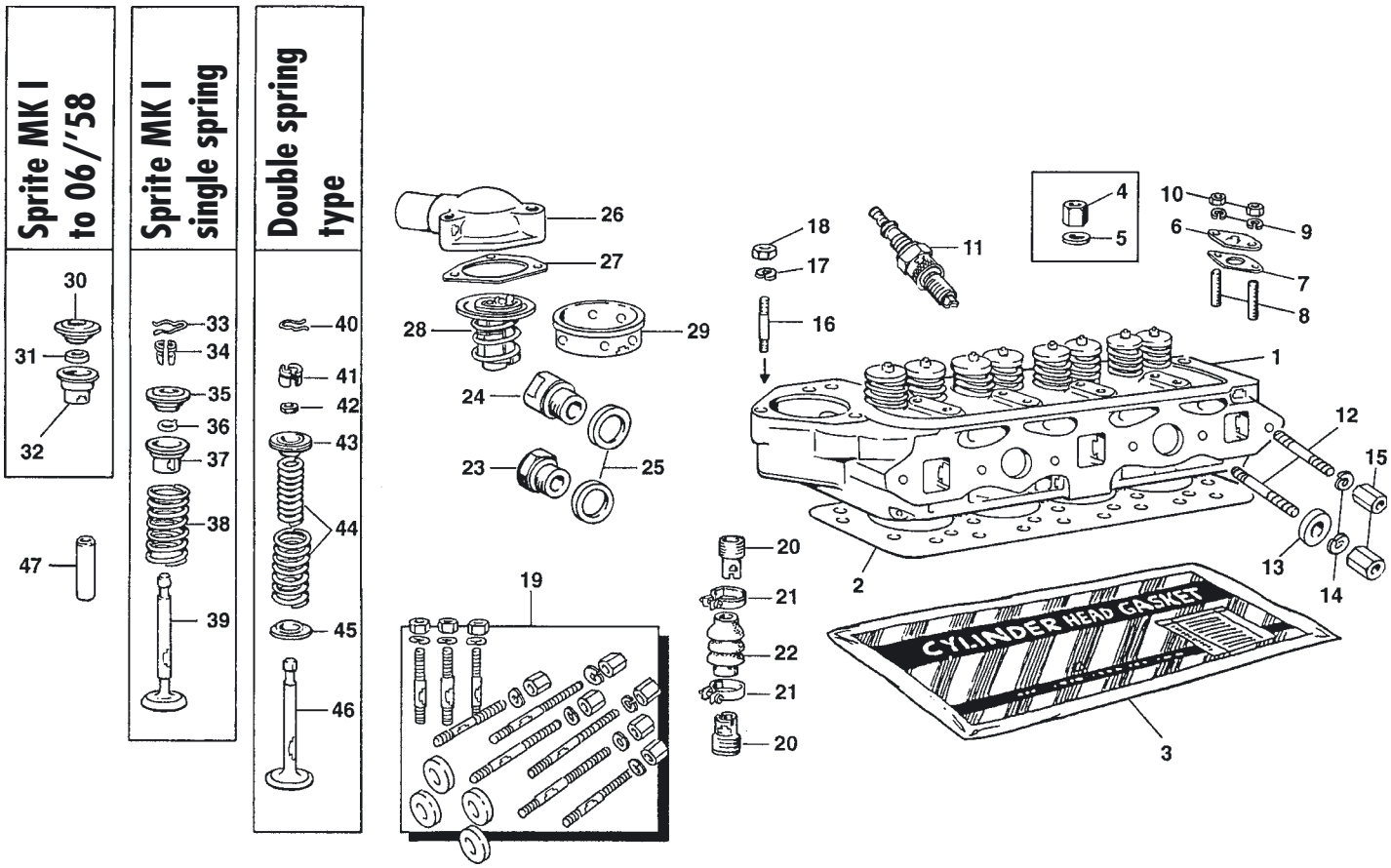

ILL N°	PART N°	QTY	DESCRIPTION	APPLICATION
1	.....	1	SEE PAGE 12	
2	016.227	1	Head gasket	
	016.495	1	Competition head gasket	
3	016.255	1	Head gasket set for 1.1/8" carburettors	Sprite MK1
	016.173	1	Head gasket set for 1.1/4" carburettors	Sprite MK2, MIDGET MK1-2
4	161.005	9	Nut, cylinder head	
5	164.004	9	Washer, heavy duty	
6	012.522	1	Blanking plate, heater tap	
7	016.177	1	Gasket	
8	167.113	2	Stud	
9	164.012	2	Washer, spring	
10	161.019	2	Nut	
11	012.005	4	Spark plug	
12	167.011	6	Stud, manifolds	
13	163.127	4	Large heavy washer	
14	164.002	6	Washer, spring	
15	161.030	6	Nut, brass	
16	167.010	3	Stud, thermostat housing	
17	164.002	3	Washer, spring	
18	161.002	3	Nut	
19	012.677	1	Stud, washers & nut kit 31 pieces	
20	012.652	2	By pass adaptor	
21	172.048	2	Clip	
22	062.044	1	Hose	
23	012.199	1	Blanking plug	
24	161.341	1	Adaptor, temperature transmitter	Not original
25	168.023	1	Washer, fibre	
26	012.474	1	Thermostat housing	948cc
	012.133	1	Thermostat housing	1098cc

ILL N°	PART N°	QTY	DESCRIPTION	APPLICATION
27	016.014	1	Gasket, thermostat housing	
28	012.013	1	Thermostat 74øC , hot summers	
	012.057	1	Thermostat 82øC , normal	
	012.085	1	Thermostat 88øC , winter	
29	012.263	1	Sleeve blanking, Use this when thermostat in not fitted.	
30	012.673	1	Cup, valve spring	to 9C U H1397 06/58
31	012.671	1	Seal	to 9C U H1397 06/58
32	012.678	1	Shroud, valve guide	to 9C U H1397 06/58
33	012.675	8	Clip	Sprite MK1
34	012.650	16	Cotter	Sprite MK1
35	012.674	8	Cap, valve spring	Sprite MK1
36	016.307	8	'O' Ring	Sprite MK1
37	012.672	8	Shroud, valve guide	Sprite MK1
38	012.645	1	Single valve spring set	Sprite MK1
39	012.644	4	Inlet valve, 27.8mm	Sprite MK1 9C engine
	012.368	4	Inlet valve, 29.4mm	Sprite MK1 9CG engine
	012.155	4	Exhaust valve, 25.4mm	
40	012.675	8	Clip	
41	012.650	16	Collet	
42	016.307	8	Oil seal	
43	012.651	8	Cap, upper	
44	012.360	1	Valve spring set, double	
45	012.536	8	Collar, locating	948cc 9CP prefix engine
46	012.368	4	Inlet valve, 29.4mm	948 & early 1098
	012.154	4	Inlet valve, 31 mm from 11/'63	1098 from 10CG18628
	012.155	4	Exhaust valve, 25.4mm	
47	012.363	8	Valve guide, 42.8mm Bronze for lead free use	948cc Sprite MK1 1958 to 02/'61
	012.365	8	Valve guide, 39.7mm Bronze for lead free use	948 & 1098 02/'61 - on

© Van Gestel C&B 1997

Oil filter installation

Tecalemit

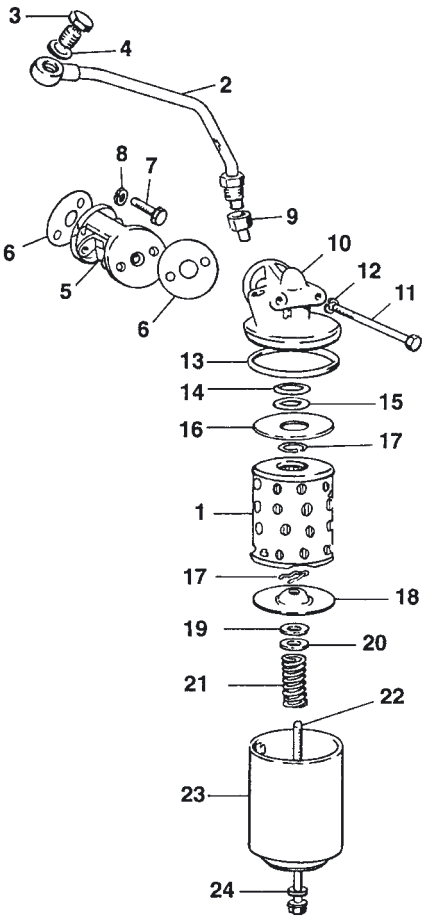

Purolator

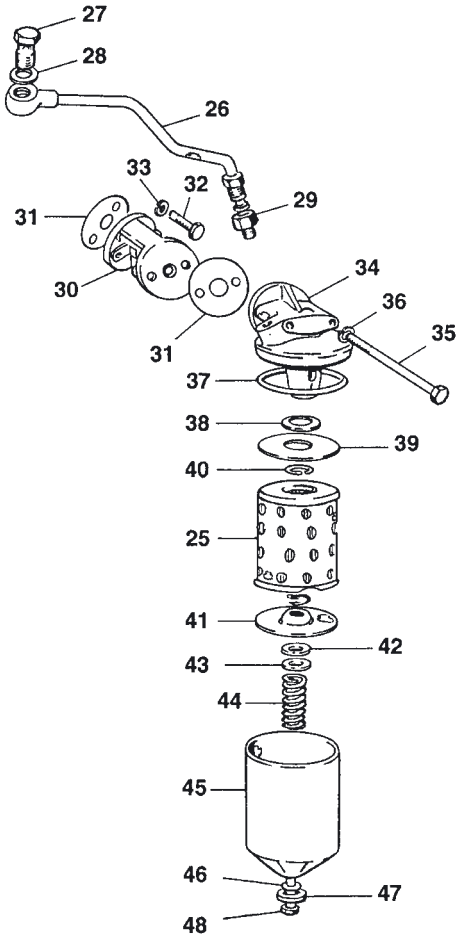

Spin-on conversion

(see also page 71)

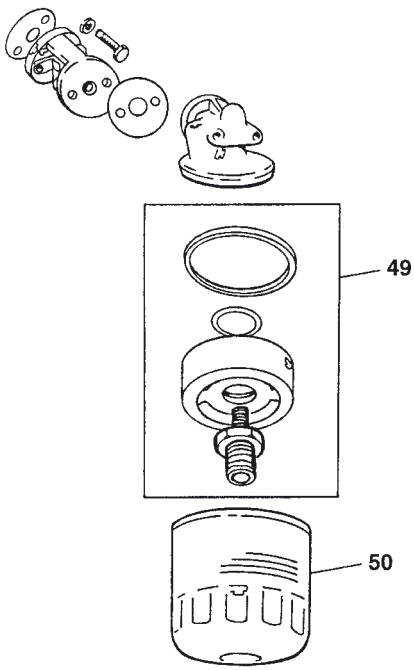

ILL N°	PART N°	QTY	DESCRIPTION
	-- TECALEMIT SYSTEM --		
1	**011.130**	**1**	Oil filter element
2	**011.759**	**1**	Pipe, oil
3	**162.713**	**1**	Bolt, banjo
4	**168.145**	**2**	Washer, copper
5	**011.602**	**1**	Adaptor
6	**016.358**	**2**	Gasket
7	**165.063**	**2**	Screw UNC
8	**164.006**	**2**	Washer, spring
9	**011.760**	**1**	Connector, pipe to head
10	**011.761**	**1**	Head, Tecalemit
11	**162.948**	**2**	Bolt 3/8"UNC x 3.3/4"
12	**164.006**	**2**	Washer, spring
13	**016.042**	**1**	Seal, supplied with filter element
14	**013.506**	**1**	Washer, dished
15	**168.175**	**1**	Washer, felt
16	**011.210**	**1**	Plate
17	**172.037**	**2**	Circlip
18	**011.070**	**1**	Plate, pressure
19	**168.018**	**1**	Washer, felt
20	**163.021**	**1**	Washer, plain
21	**171.002**	**1**	Spring
22	**165.095**	**1**	Bolt
23	**011.762**	**1**	Container
24	**168.176**	**1**	Seal

ILL N°	PART N°	QTY	DESCRIPTION
	-- PUROLATOR --		
25	**011.130**	**1**	Oil filter element & seal
26	**011.403**	**1**	Oil pipe
27	**162.713**	**1**	Banjo bolt
28	**168.145**	**2**	Washer, copper
29	**011.760**	**1**	Adaptor, pipe to head
30	**011.602**	**1**	Adaptor, block to head
31	**016.358**	**2**	Gasket
32	**165.063**	**2**	Bolt, UNC
33	**164.006**	**2**	Washer, spring
34	**011.763**	**1**	Head, PUROLATOR
35	**162.948**	**2**	Bolt 3.3/4" check lenght before fitting !
36	**164.006**	**2**	Washer, spring
37	**016.420**	**1**	Seal
38	**168.178**	**1**	Gasket, clamp plate to head
39	**013.115**	**1**	Plate, clamping
40	**172.682**	**1**	Circlip
41	**011.599**	**1**	Plate, pressure
42	**168.044**	**1**	Seal, pressure plate
43	**163.048**	**1**	Washer, plain
44	**013.310**	**1**	Spring
45	**011.600**	**1**	Container
46	**168.159**	**1**	'O' Ring
47	**163.186**	**1**	Collar, centre bolt
48	**165.096**	**1**	Bolt
	-- SPIN-ON CONVERSION --		
49	**011.156**	**1**	Spin-on conversion kit
50	**011.131**	**1**	Spin-on oil filter

© Van Gestel C&B 1997

Engine mountings, dynamo mounting & inlet manifold

Engine & gearbox mountings

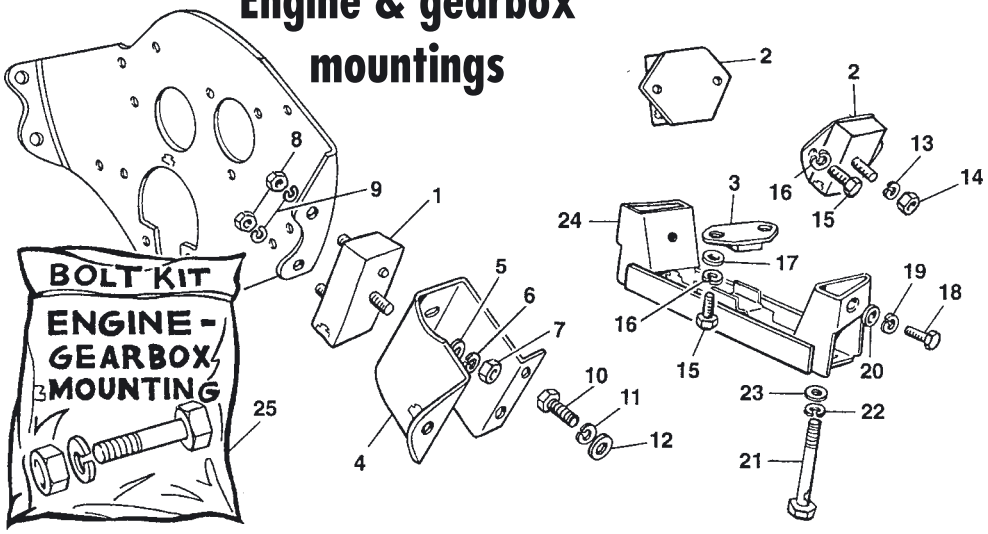

Sprite MK I 1.1/8" inlet

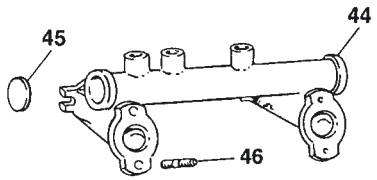

Sprite MK II & Midget MK I 1.1/4" inlet

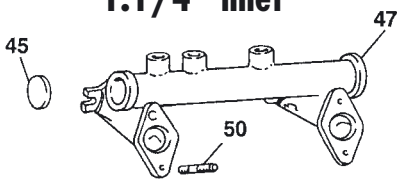

Dynamo mountings

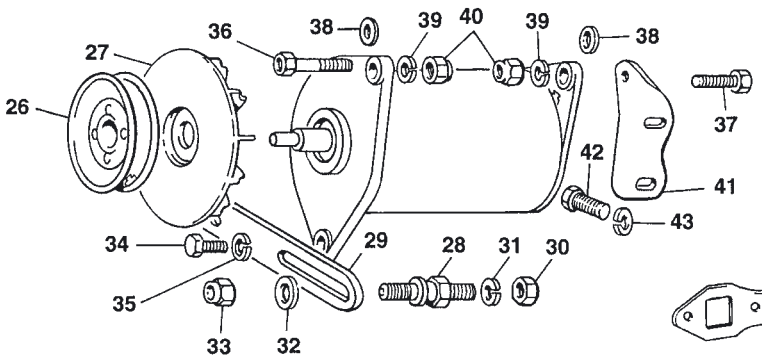

1.1/4"Nov. '63-on

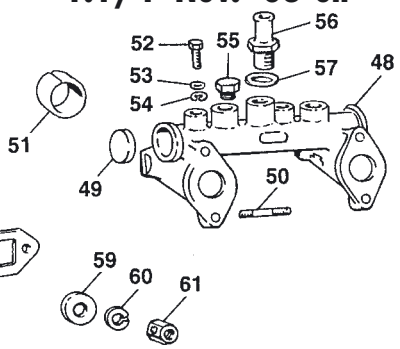

ILL N°	PART N°	QTY	DESCRIPTION	APPLICATION
1	**011.129**	**2**	Engine mounting	
2	**027.068**	**2**	Gearbox mounting	
3	**027.069**	**1**	Gearbox steady mounting	
4	**011.609**	**1**	RH Engine mounting bracket	
	011.610	**1**	LH Engine mounting bracket	
5	**163.005**	**2**	Washer, plain	
6	**164.006**	**2**	Washer, spring	
7	**161.026**	**2**	Nut, mounting to bracket	
8	**161.002**	**4**	Nut, mounting to front plate	
9	**164.002**	**4**	Washer, spring	
10	**162.005**	**6**	Screw, bracket to frame	
11	**164.002**	**6**	Washer, spring	
12	**163.001**	**6**	Washer, plain	
13	**164.006**	**2**	Washer, spring	
14	**161.026**	**2**	Nut	
15	**162.090**	**6**	Screw UNC	
16	**164.002**	**6**	Washer, spring	
17	**163.001**	**1**	Washer, plain	
18	**162.005**	**2**	Bolt, tunnel to bracket	
19	**164.002**	**2**	Washer, spring	
20	**163.001**	**2**	Washer, plain	
21	**162.676**	**2**	Bolt, floor to bracket	
22	**164.006**	**2**	Washer, spring	
23	**163.005**	**2**	Washer, plain	
24	**132.978**	**2**	Gearbox mounting bracket	
25	**011.764**	**1**	Bolting kit, engine mountings & gearbox mounting. 62 pieces.	
26	**081.219**	**1**	Pulley	
27	**081.024**	**1**	Fan	
28	**081.028**	**1**	Mounting pillar, 948cc	
	081.571	**1**	Mounting pillar, 1098cc	
29	**081.570**	**1**	Adjusting link, 948cc	
	081.041	**1**	Adjusting link, 1098cc	
30	**161.026**	**1**	Nut	
31	**164.006**	**1**	Washer, spring	
32	**163.005**	**1**	Washer, plain	
33	**161.025**	**1**	Nut, nylonlock	
34	**081.026**	**1**	Screw UNC	
35	**164.002**	**1**	Washer, spring	
36	**162.081**	**1**	Bolt, dynamo to waterpump	
37	**162.030**	**1**	Bolt, dynamo to bracket	
38	**163.001**	**2**	Washer, flat	
39	**164.002**	**2**	Washer, spring	
40	**161.012**	**2**	Nut, self locking	
41	**011.046**	**1**	Bracket, dynamo to engine	
42	**162.022**	**2**	Screw, bracket to engine	
43	**164.002**	**2**	Washer, spring	
44	**011.324**	**1**	Inlet manifold, 1.1/8"	Sprite MK1
45	**011.177**	**2**	Plug, dish	
46	**167.241**	**4**	Stud, UNC/UNF 1/4" x 1.7/8"	
47	**011.765**	**1**	Inlet manifold, 1.1/4"	up to Nov.1963
48	**011.325**	**1**	Inlet manifold, 1.1/4"	from Nov.1963
49	**011.614**	**1**	Plug, cup	
50	**167.110**	**4**	Stud, UNC/UNF 3/8" x 2.1/2"	
51	**012.401**	**2**	Lockating ring	from Nov.1963
52	**162.958**	**2**	Screw, 1/4" UNC	
53	**164.012**	**2**	Washer, spring	
54	**163.010**	**2**	Washer, plain	
55	**012.199**	**A/R**	Plug	
56	**011.073**	**A/R**	Vacuum adaptor	Servo brake etc.
57	**168.023**	**2**	Washer, sealing	
58	**016.169**	**1**	Gasket, manifold	
59	**163.127**	**4**	Washer, heavy duty	
60	**164.002**	**6**	Washer, spring	
61	**161.030**	**6**	Nut, brass	

© Van Gestel C&B 1997

Exhausts system

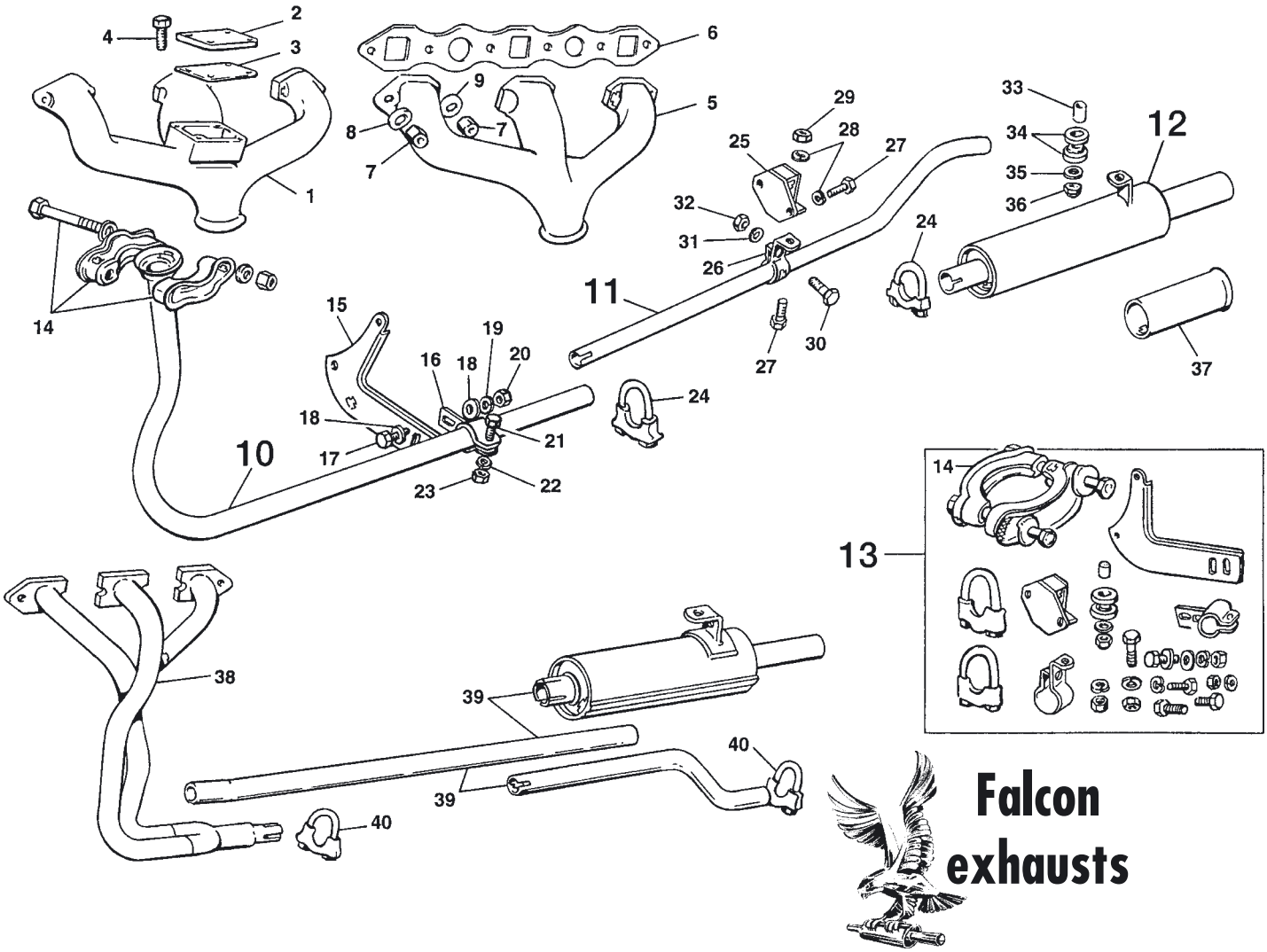

ILL N°	PART N°	QTY	DESCRIPTION	APPLICATION
1	**110.247**	**1**	Exhaust manifold use prior to ill.Nø5	Sprite MK1
2	**135.758**	**1**	Cover plate	Sprite MK1
3	**016.507**	**1**	Gasket	Sprite MK1
4	**162.029**	**4**	Screw	Sprite MK1
5	**110.172**	**1**	Exhaust manifold	all
6	**016.169**	**1**	Gasket, exhaust manifold	
7	**161.030**	**6**	Nut, brass	
8	**164.002**	**6**	Washer, spring	
9	**163.127**	**4**	Washer, heavy duty	
10	**110.036**	**1**	Front pipe made from stainless steel	
11	**110.037**	**1**	Pipe, intermediate made from stainless steel	
12	**110.038**	**1**	Silencer assembly made from stainless steel with polished tail pipe	
13	**111.191**	**1**	Complete exhaust fitting kit for standard exhaust system.	
14	**111.039**	**1**	Front clamp assembly	
15	**111.127**	**1**	Steady bracket, gearbox to front pipe	
16	**111.126**	**1**	Clamp, pipe to bracket	
17	**162.005**	**2**	Screw, clamp to bracket	
18	**163.001**	**4**	Washer, plain	
19	**164.002**	**2**	Washer, spring	
20	**161.002**	**2**	Nut	
21	**162.020**	**1**	Screw, clamp	
22	**164.002**	**1**	Washer, spring	
23	**161.002**	**1**	Nut	
24	**111.190**	**2**	Exhaust clamp 35mm heavy duty	
25	**111.099**	**1**	Support, rubber mounting	
26	**111.192**	**1**	Bracket, support	
27	**162.045**	**3**	Screw	
28	**164.002**	**3**	Washer, spring	
29	**161.002**	**3**	Nut	
30	**162.515**	**1**	Screw	
31	**164.012**	**1**	Washer, spring	
32	**161.019**	**1**	Nut	
33	**111.123**	**1**	Spacer, rubber bushes	
34	**111.124**	**2**	Bush, rubber	
35	**163.008**	**1**	Washer, plain	
36	**161.012**	**1**	Nut, nylock	
37	**185.068**	**1**	Chrome tail pipe finisher 1.5/8" ID	
38			Tubular exhaust manifold. For high performance with using 1.3/8" outher pipes and 1.1/2" inner pipe.	
	110.167	**1**	Tubular manifold, 948cc	
	110.245	**1**	Tubular manifold, 1098 or 1275cc	
39	**110.246**	**1**	High performance exhaust system. Made from stainless steel. Big pipes 1.5/8" O.D. standard pipes are only 1.3/8". Large capacity single silencer.	
40	**111.025**	**A/R**	Exhaust clamp 1.5/8" I.D.	
	111.027	**A/R**	Exhaust clamp 1.3/4" I.D.	

© Van Gestel C&B 1997

Cooling system

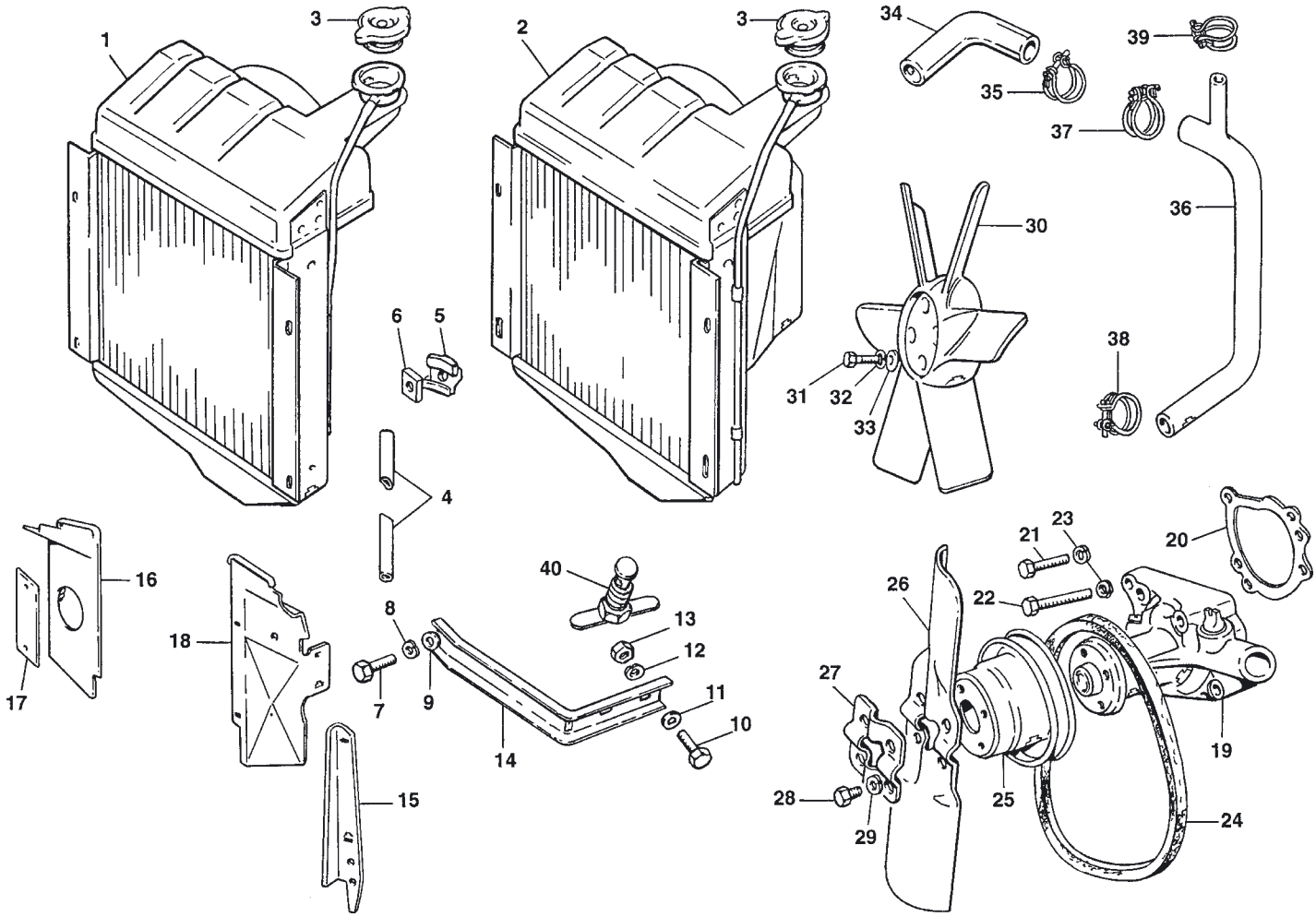

ILL N°	PART N°	QTY	DESCRIPTION	APPLICATION
1	**060.054**	**1**	Radiator, without shroud	Sprite MK1 to Nov.'58
2	**060.017**	**1**	Radiator with shroud	all from Nov.'58
3	**061.011**	**1**	Filler cap	
4	**062.005**	**1**	Hose, overflow	
5	**161.389**	**4**	Cage, clip	
6	**161.388**	**4**	Square nut	
7	**162.029**	**4**	Screw, radiator	
8	**164.012**	**4**	Washer, spring	
9	**163.011**	**4**	Washer, plain	
10	**162.077**	**4**	Screw	
11	**163.097**	**4**	Washer, plain	
12	**164.012**	**4**	Washer, spring	
13	**161.019**	**4**	Nut	
14	**132.816**	**1**	RH Bracket	
	132.817	**1**	LH Bracket	
15	**132.640**	**1**	RH Support bracket	Sprite MK1
	132.641	**1**	LH Support bracket	Sprite MK1
	132.238	**1**	RH Support bracket	Sprite MK2 & Midgets
	132.239	**1**	LH Support bracket	Sprite MK2 & Midgets
16	**132.544**	**1**	RH Splash panel	
17	**135.754**	**1**	Blanking plate fitted	when heater is NOT
18	**132.545**	**1**	LH Splash panel	
19	**061.080**	**1**	Water pump	
20	**016.345**	**1**	Gasket, water pump	

ILL N°	PART N°	QTY	DESCRIPTION	APPLICATION
21	**162.057**	**2**	Bolt, short	
22	**162.703**	**2**	Bolt, long	
23	**164.002**	**4**	Washer, spring	
24	**061.004**	**1**	Fan Belt	
25	**061.195**	**1**	Pulley	
26	**081.233**	**1**	Fan	
27	**061.173**	**1**	Stiffener plate	
28	**162.077**	**4**	Screw	
29	**164.012**	**4**	Washer, spring	
30	**061.161**	**1**	Plastic fan, 6 blade	not original
31	**162.682**	**4**	Screw	
32	**164.012**	**4**	Washer, spring	
33	**163.010**	**4**	Washer, plain	
34	**062.032**	**1**	Top hose	
35	**172.114**	**2**	Wire clip, 32mm	
36	**062.033**	**1**	Bottom hose for steel water pump	use 35mm clip, upper
	062.034	**1**	Bottom hose for aluminium water pump	use 34mm clip, upper
37	**172.113**	**1**	Upper clip, 35mm	steel water pump
	172.119	**1**	Upper clip, 34mm	aluminium water pump
38	**172.119**	**1**	Lower clip, 34mm	all
39	**172.677**	**1**	Small clip, to heater pipe	22 mm
40	**061.237**	**1**	Drain tap	

© Van Gestel C&B 1997

Ignition system

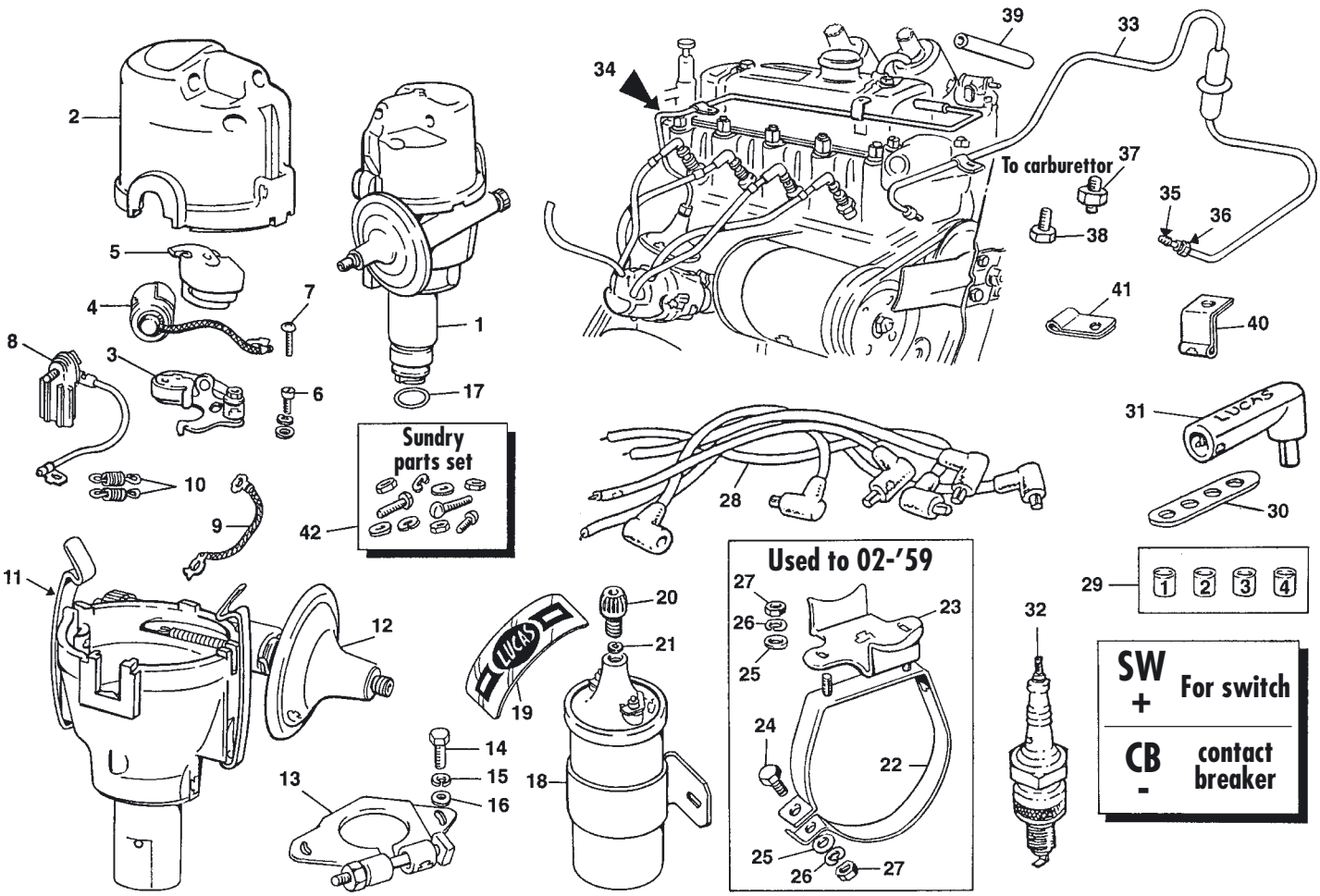

ILL N°	PART N°	QTY	DESCRIPTION	APPLICATION
1	**081.574**	**1**	Distributor, 40772	948cc 1958-'61
	081.273	**1**	Distributor, 40773	948cc 1962
	081.152	**1**	Distributor, 40919	1098cc 1963
2	**081.018**	**1**	Distributor cap	
3	**081.016**	**1**	Contact set	
4	**081.017**	**1**	Condensor	
5	**081.020**	**1**	Rotor arm	
6	**162.170**	**1**	Screw, contact set	
7	**162.375**	**1**	Screw, condensor	
8	**081.011**	**1**	Terminal bush and lead	Screw fitting connector
	081.049	**1**	Terminal bush and lead	Lucar fitting connector
9	**081.052**	**1**	Earth lead	
10	**081.336**	**1**	Spring set, 5 pieces	Select the required springs
11	**081.060**	**2**	Clip, cover clamping	
12	**081.010**	**1**	Vacuum unit, screw-on	
13	**081.021**	**1**	Clamp assembly	
14	**162.076**	**2**	Screw, clamp/engine	
15	**164.012**	**2**	Washer, spring	
16	**163.010**	**2**	Washer, plain	
17	**081.061**	**1**	'O' Ring	
18	**081.194**	**1**	Coil, screw-in HT lead	As illustrated
	081.001	**1**	Coil, push-in HT lead	
	081.195	**1**	Sports coil	
19	**085.082**	**1**	"LUCAS" Lable	
20	**081.071**	**1**	Nut, terminal	
21	**081.072**	**1**	Washer, for terminal	
22	**081.002**	**1**	Bracket, coil/dynamo	

ILL N°	PART N°	QTY	DESCRIPTION	APPLICATION
23	**081.236**	**1**	Steady plate, coil	
24	**162.029**	**1**	Screw, clamping	
25	**163.010**	**3**	Washer, plain	
26	**164.012**	**3**	Washer, spring	
27	**161.019**	**3**	Nut	
28	**081.003**	**1**	HT Lead set, with modern type end terminals	
	081.213	**1**	HT Lead set, with black backelite Lucas terminals	
29	**081.067**	**1**	Cable indicator set Yellow with black printing	
30	**081.068**	**1**	Cable separator	
31	**081.006**	**4**	Lucas plug terminal	
32	**012.005**	**4**	Spark plug, Champion	
	012.355	**4**	Spark plug, NGK	
33	**081.004**	**1**	Vacuum pipe	Sprite MK1
34	**081.339**	**1**	Vacuum pipe	Sprite MK2 & Midget
35	**013.238**	**2**	Olive	Comes with vacuum pipe
36	**161.325**	**2**	Nut	Comes with vacuum pipe
37	**102.329**	**1**	Adaptor, vacuum pipe to carburettor body	
38	**161.403**	**1**	Plug, carb.body	
39	**081.064**	**1**	Connector, push-on	
40	**172.678**	**1**	Clip	
41	**172.127**	**1**	Clip, cyl.head nut	
42	**081.214**	**1**	Sundries kit	

© Van Gestel C&B 1997

Sprite MK I
04 - '58 to 06 - '60

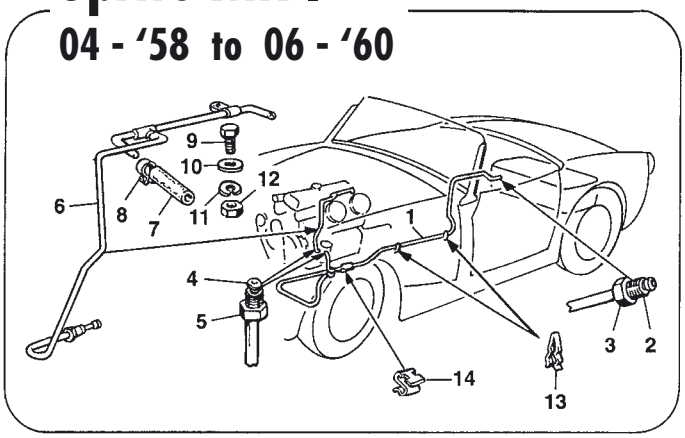

Sprite MK II & Midget MK I
02 - '61 to 01 - '64

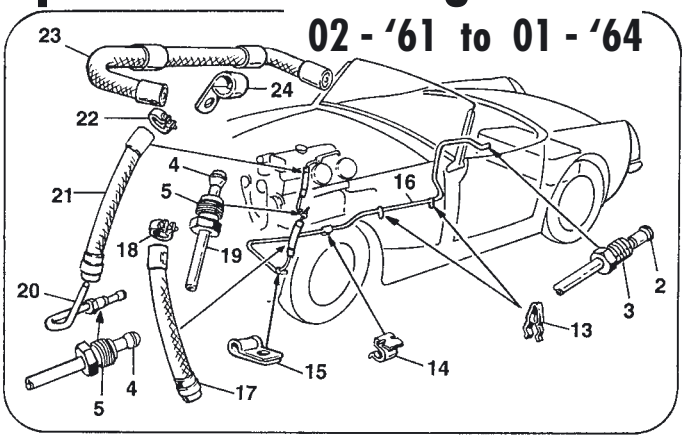

Sprite MK I
06 - '60 to 02 - '61

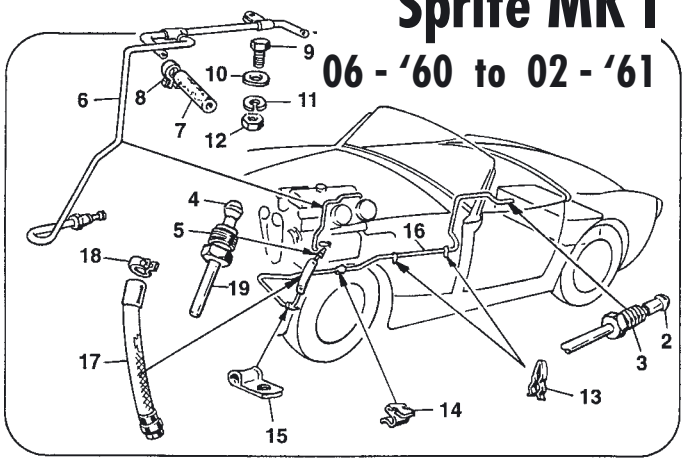

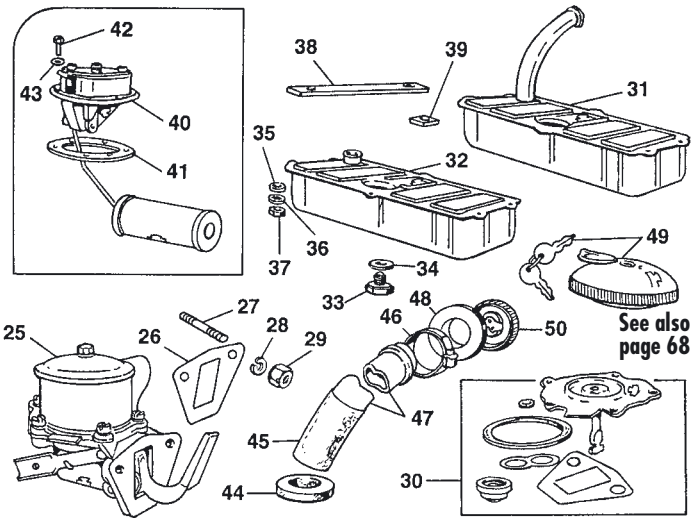

See also page 68

ILL N°	PART N°	QTY	DESCRIPTION	APPLICATION
1	**101.809**	**1**	Fuel pipe, tank to pump included olives & nuts	Sprite MK1 to 06-'60
2	**161.400**	**1**	Olive, tank side	
3	**161.399**	**1**	Nut, tank side	
4	**161.405**	**2**	Olive, pump side	
5	**161.470**	**2**	Nut, pump side	
6	**101.317**	**1**	Fuel pipe, pump to carb. included olives & nuts	Sprite MK1
7	**101.319**	**2**	Hose, pipe to carburettor	
8	**172.676**	**4**	Clip, hose	
9	**162.076**	**2**	Screw	
10	**163.097**	**2**	Washer, plain	
11	**164.012**	**2**	Washer, spring	
12	**161.019**	**2**	Nut	
13	**172.192**	**2**	Clip, pipe to floor	
14	**172.272**	**3**	Clip, pipe to frame	
15	**172.055**	**1**	Clip, front	
16	**101.806**	**1**	Pipe, tank to hose included olive & nut	Sprite & Midget 06-'60 to 01-'64
17	**101.325**	**1**	Hose, between pipes	excluded clips
18	**172.051**	**2**	Clip, hose	
19	**101.807**	**1**	Pipe, hose to pump	incl.olive & nut
20	**101.839**	**1**	Pipe, pump to hose	incl.olive & nut
21	**101.327**	**1**	Hose to carburettor	
22	**172.051**	**6**	Clip, hose clamping	
23	**101.328**	**1**	Hose, carb.to carb.	
24	**172.052**	**2**	Clamp	

ILL N°	PART N°	QTY	DESCRIPTION	APPLICATION
25	**101.285**	**1**	Relacement fuel pump	
26	**016.378**	**1**	Gasket	
27	**167.215**	**2**	Stud	
28	**164.002**	**2**	Washer, spring	
29	**161.002**	**2**	Nut	
30	**101.320**	**1**	Repair kit, fuel pump	
31	**100.049**	**1**	Fuel tank	Sprite MK1
32	**100.012**	**1**	Fuel tank	Sprite MK2 & Midget MK1
33	**162.876**	**1**	Drain plug	for OE tank only
34	**168.162**	**1**	Seal, plug	
35	**163.001**	**6**	Washer, plain	
36	**164.031**	**6**	Washer, shakeproof	
37	**161.002**	**6**	Nut	
38	**121.380**	**2**	Seal, rubber	
39	**121.381**	**2**	Seal, rubber	
40	**086.094**	**1**	Sending unit	Sprite MK1
	086.095	**1**	Sending unit	Sprite MK2 & Midget MK1
41	**016.024**	**1**	Gasket	
42	**162.118**	**6**	Screw	
43	**164.016**	**6**	Washer, shakeproof	
44	**101.053**	**1**	Seal, foam, tank to floor	
45	**101.421**	**1**	Hose, fillerneck to tank	Sprite MK2 & Midget MK1
46	**172.268**	**2**	Clamp for hose	Sprite MK2 & Midget MK1
47	**101.255**	**1**	Filler neck	Sprite MK2 & Midget MK1
48	**101.306**	**1**	Seal, neck to body	
49	**101.058**	**1**	Filler cap & lock	Also see page 68
50	**101.057**	**1**	Filler cap	Also see page 68

© Van Gestel C&B 1997

Air filter & carburettor controls

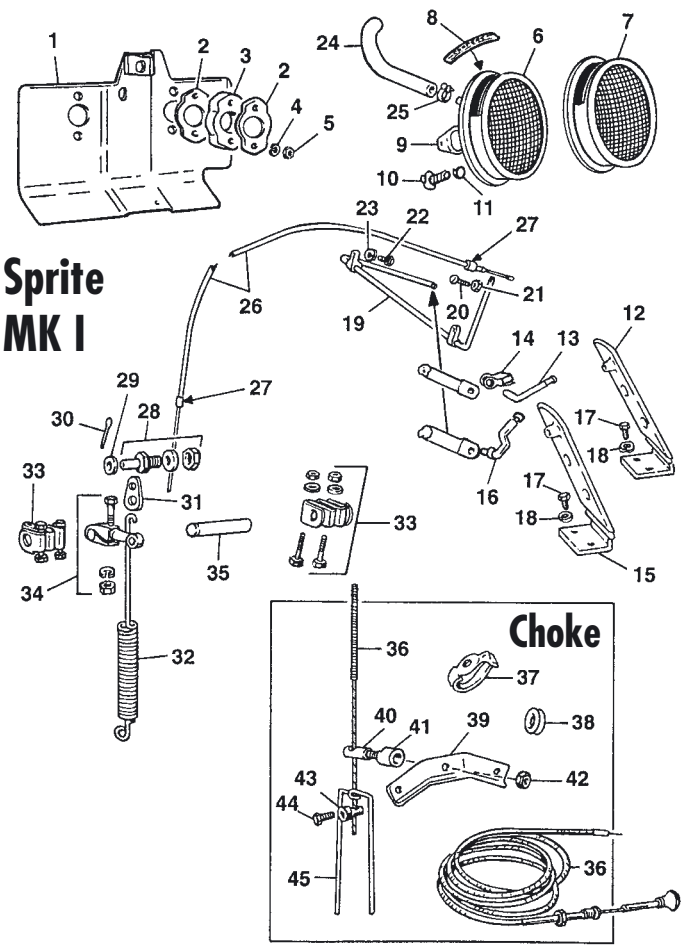

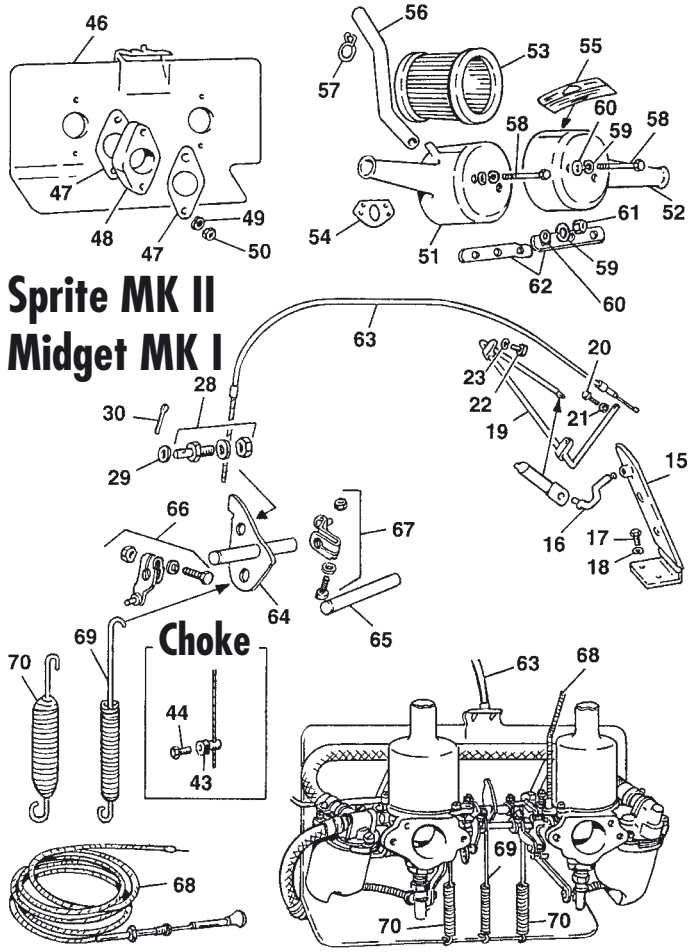

ILL N°	PART N°	QTY	DESCRIPTION	APPLICATION
	SPRITE MK I			
1	**101.190**	**1**	Heat Shield, 1.1/8"	Sprite MK1
2	**016.292**	**6**	Gasket, 1.1/8"	Sprite MK1
3	**101.817**	**2**	Spacer, 1.1/8"	Sprite MK1
4	**164.012**	**4**	Washer, spring	Sprite MK1
5	**161.019**	**4**	Nut	Sprite MK1
6	**101.380**	**1**	Front air filter	Sprite MK1
7	**101.381**	**1**	Rear air filter	Sprite MK1
8	**085.036**	**2**	Sticker, 'Coopers'	Sprite MK1
9	**016.506**	**2**	Gasket, filter to carb.	Sprite MK1
10	**162.005**	**4**	Screw	Sprite MK1
11	**164.002**	**4**	Washer, spring	Sprite MK1
12	**101.840**	**1**	Accelerator pedal	Early model
13	**101.841**	**1**	Link piece for 101.840	Early model
14	**101.842**	**1**	Fastener for 101.841	Early model
15	**133.400**	**1**	Accelerator pedal	Later model
16	**133.401**	**1**	Link piece, for 133.400	Later model
17	**162.076**	**2**	Screw, pedal fixing	
18	**164.012**	**2**	Washer, spring	
19	**132.981**	**1**	Cross linkage	
20	**162.515**	**1**	Screw, pedal adjustment	
21	**161.362**	**1**	Locknut, pedal adjustment	
22	**162.515**	**3**	Screw, linkage fixing	
23	**164.012**	**3**	Washer, spring	
24	**101.813**	**1**	Breather hose	Sprite MK1
25	**172.012**	**2**	Clip	Sprite MK1
26	**101.810**	**1**	Accelerator cable, black	Sprite MK1
27	**101.316**	**2**	Ferrule, cable	Sprite MK1
28	**172.027**	**1**	Fastener, cable	
29	**163.007**	**1**	Washer, plain	
30	**102.189**	**1**	Cotter pin	
31	**163.033**	**1**	Plate, spring to fastener	Sprite MK1
32	**171.069**	**1**	Spring, accelerator return	Sprite MK1
33	**102.324**	**2**	Coupling assembly	Sprite MK1
34	**102.047**	**1**	Arm, accelerator	Sprite MK1
35	**102.855**	**1**	Connection shaft	Sprite MK1
36	**101.811**	**1**	Choke cable	Sprite MK1
37	**083.058**	**1**	Rubber strap, cable to heater	
38	**122.005**	**1**	Grommet, cable pass	
39	**101.812**	**1**	Bracket, choke	Sprite MK1
40	**101.740**	**1**	Locating pin	Sprite MK1
41	**101.741**	**1**	Locating collar	Sprite MK1
42	**161.548**	**1**	Nut, locking	Sprite MK1
43	**172.054**	**1**	Choke trunnion	
44	**172.271**	**1**	Screw, trunnion	
45	**102.693**	**1**	Stirrup	Sprite MK1
	SPRITE MK II & MIDGET			
46	**101.128**	**1**	Heat shield, 1.1/4"	Sprite MK2 & Midget
47	**016.290**	**6**	Gasket, 1.1/4"	Sprite MK2 & Midget
48	**102.435**	**2**	Spacer, 1.1/4"	Sprite MK2 & Midget
49	**164.006**	**4**	Washer, spring	Sprite MK2 & Midget
50	**161.009**	**4**	Nut, flat	Sprite MK2 & Midget
51	**101.416**	**1**	Air cleaner box, front	Sprite MK2 & Midget
52	**101.417**	**1**	Air cleaner box, rear	Sprite MK2 & Midget
53	**101.127**	**2**	Air cleaner element	Sprite MK2 & Midget
54	**016.291**	**2**	Gasket, cleaner to carb.	Sprite MK2 & Midget
55	**085.035**	**2**	Sticker, 'COOPERS'	Sprite MK2 & Midget
56	**101.816**	**1**	Breather hose	Sprite MK2 & Midget
57	**172.012**	**2**	Clip, breather hose	Sprite MK2 & Midget
58	**165.091**	**4**	Bolt, UNC	Sprite MK2 & Midget
59	**164.002**	**5**	Washer, spring	Sprite MK2 & Midget
60	**163.008**	**5**	Washer, plain	Sprite MK2 & Midget
61	**161.012**	**1**	Nut, nylon lock	Sprite MK2 & Midget
62	**101.843**	**1**	Pair brackets, filter	Sprite MK2 & Midget
63	**101.464**	**1**	Accelerator cable	Sprite MK2 & Midget
64	**102.681**	**1**	Lever, accelerator	Sprite MK2 & Midget
65	**102.682**	**1**	Connecting rod, choke	Sprite MK2 & Midget
66	**102.148**	**2**	Coupling, front	Sprite MK2 & Midget
67	**102.149**	**2**	Coupling, rear	Sprite MK2 & Midget
68	**101.814**	**1**	Choke cable assembly	Sprite MK2 & Midget
69	**171.020**	**1**	Spring, long	Sprite MK2 & Midget
70	**171.011**	**2**	Spring, short	Sprite MK2 & Midget

© Van Gestel C&B 1997

Complete carburettors & repair kits

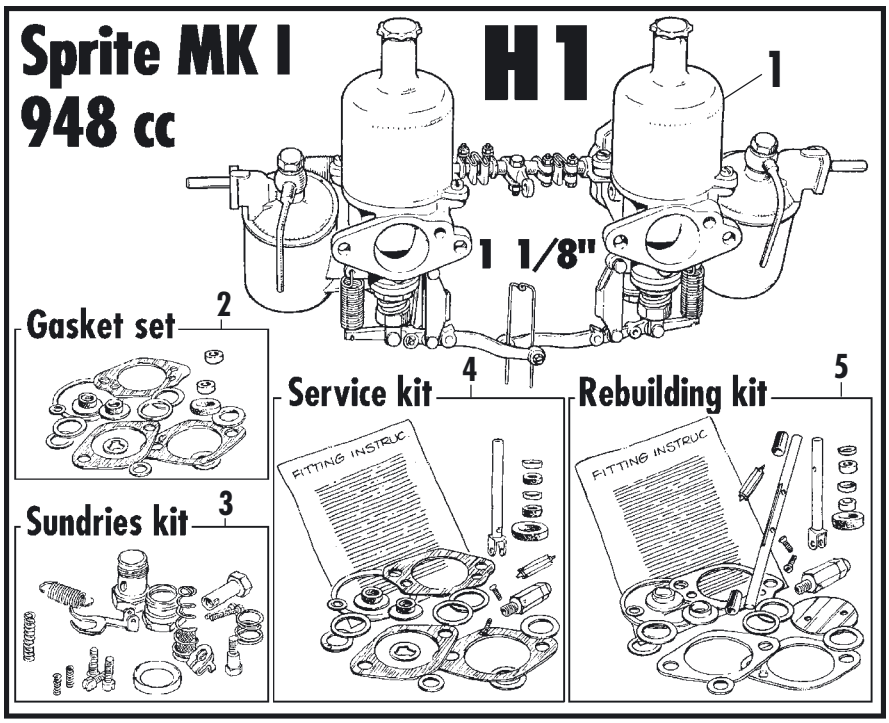

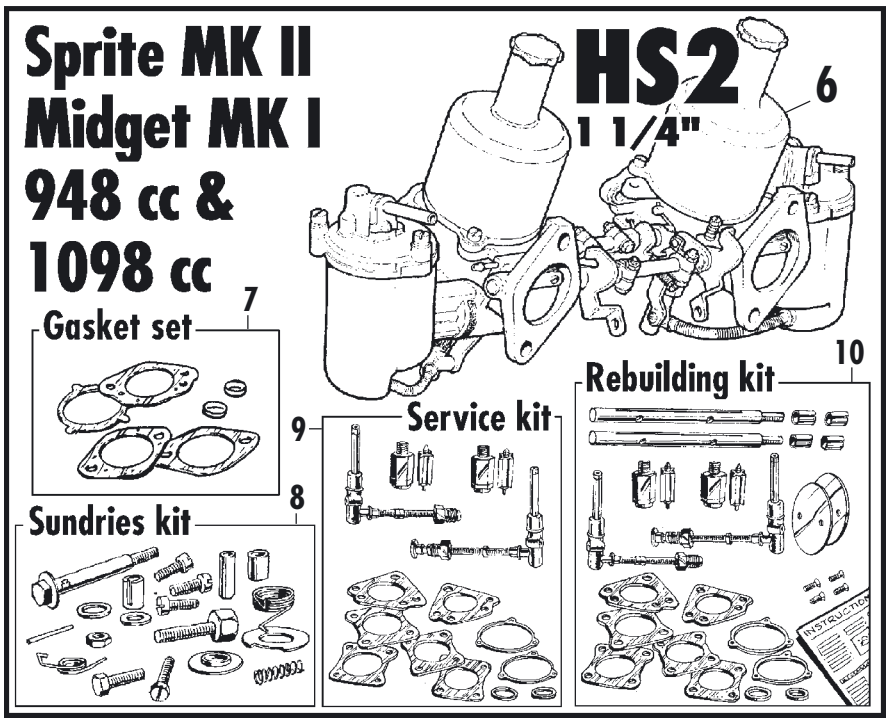

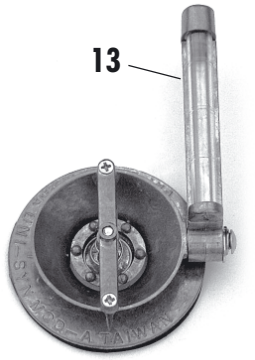

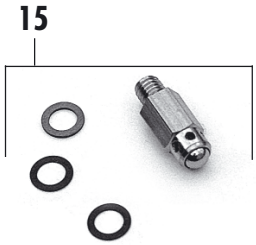

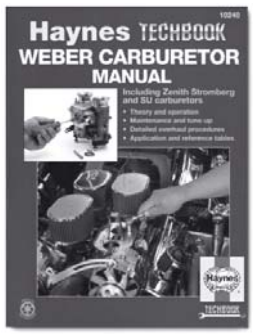

190.428
Haynes carburettor worshop manual
This manual covers Weber, Stromberg & SU carburettors. Many illustrations and excellent step by step explainations.

190.225
SU carburettors, Tuning tips & techniques
Most mechanics and enthusiasts struggle with setting the twin SU carburettors correctly. This book and a bit of practice will solve the problem. It is very important for your engine that the carburettor tuning is correct. This book also covers all SU fuel pumps.

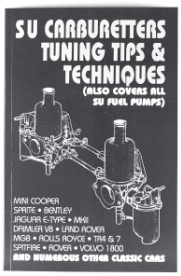

ILL N°	PART N°	QTY	DESCRIPTION	APPLICATION
1	**102.859**	**1**	Pair carburetters H1	Sprite MK1
2	**102.241**	**2**	Gasket kit, one carburettor	
3	**102.258**	**2**	Sundries kit, one carb.	
4	**102.152**	**2**	Service kit, one carb. Gaskets, jet, needle & seat	
5	**102.856**	**2**	Rebuilding kit, one carb. Gaskets, jets, needle & seats, shaft, bushes and discs.	
6	**102.866**	**1**	Pair carburetters HS2	948cc
	102.662	**1**	Pair carburetters HS2	1098cc
7	**102.551**	**2**	Gasket pack for one carb.	
8	**102.259**	**2**	Sundries kit for one carb.	
9	**102.154**	**1**	Service kit for one PAIR carb. Gaskets, jets, needle & seats	
10	**102.229**	**1**	Rebuilding kit for one PAIR carb. Gaskets, jets, needle & seats, shafts, bushes and discs.	
11	**198.015**	**1**	Carburetter cleaner spray	
12	**330.070**	**1**	125 ml. Carburetter oil	
13	**200.572**	**1**	Synchrotester	
14	**102.302**	**1**	Tool kit, 3 pieces	
	200.573	**1**	Tool kit, 8 pieces	
15	**102.216**	**2**	GROSE JET, improvement for the standard needle & seat. The efficient fuel cut-off is based on a double ball system.	

© Van Gestel C&B 1997

Sprite MK I H1 carburettor parts

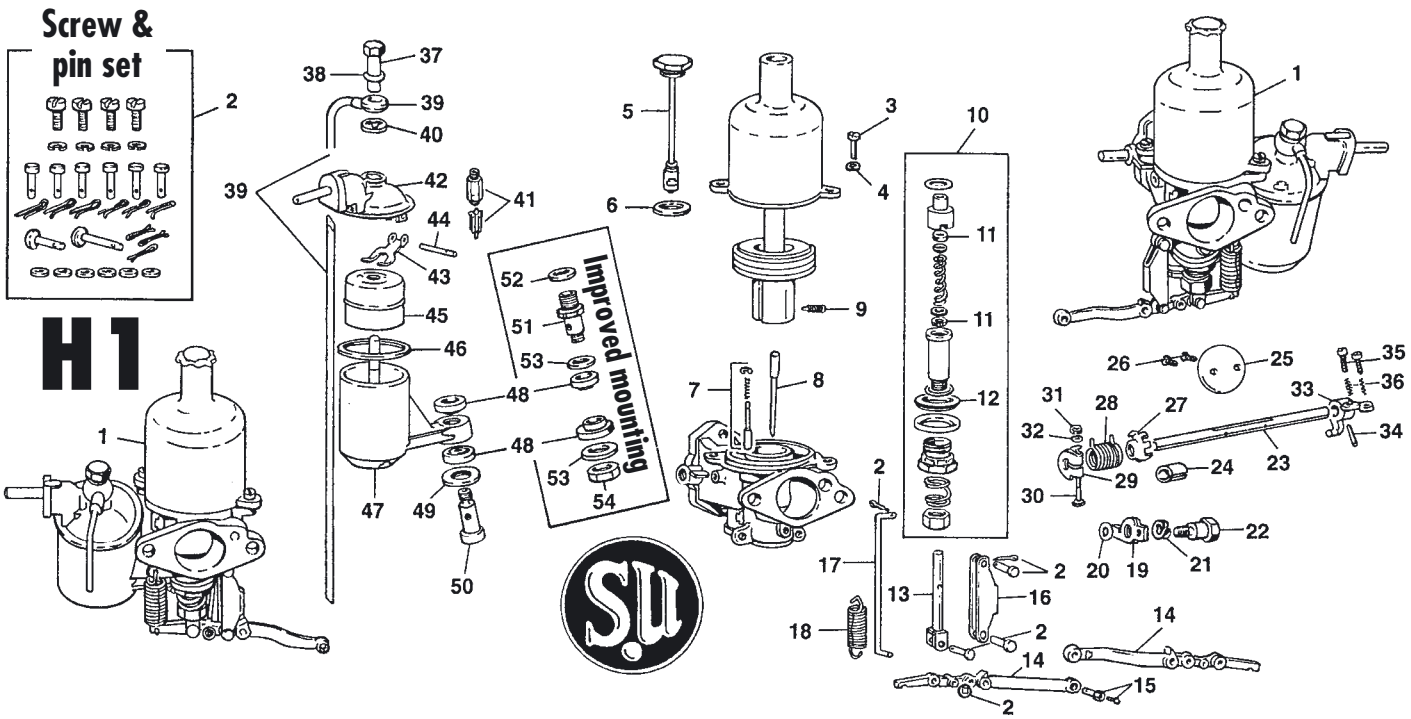

ILL N°	PART N°	QTY	DESCRIPTION	APPLICATION
			applications	
1	**102.859**	**1**	Pair carburetters	
2	**102.503**	**1**	Screw and pin set	
3	**102.012**	**4**	Screw, also in set	
4	**164.015**	**4**	Washer, spring	
5	**102.342**	**2**	Damper assembly, brass cap	
6	**102.080**	**2**	Washer, fibre	
7	**102.003**	**2**	Piston lifting kit	
8	**102.473**	**2**	Needle GG	standard
	102.471	**2**	Needle EB	rich
	102.849	**2**	Needle MOW weak	
9	**102.007**	**2**	Needle locking screw	
10	**102.501**	**2**	Jet bearing kit	
11	**102.093**	**4**	Cork washer, small	
12	**102.091**	**2**	Cork washer, large	
13	**102.014**	**2**	Jet	
14	**102.870**	**2**	Carburetter link	
15	**102.692**	**1**	Pivot & screw	
16	**102.871**	**2**	Link, 1.78" pin to pin	
17	**102.862**	**2**	Rod	
18	**102.030**	**2**	Spring	
19	**102.850**	**2**	Cam, fast idle	
20	**102.200**	**2**	Washer, aluminium	
21	**102.039**	**2**	Spring	
22	**102.038**	**2**	Pivot bolt	
23	**102.646**	**2**	Spindle shaft	
24	**102.382**	**4**	Repair bush, 1/4"I.D.	
			Ream body bosses to 8 mm	
25	**102.851**	**2**	Disc 1.1/8"	
26	**102.050**	**4**	Screw	
27	**102.872**	**1**	Plate, return spring	front carburetter
28	**102.052**	**1**	Return spring	front carburetter

ILL N°	PART N°	QTY	DESCRIPTION	APPLICATION
29	**102.873**	**1**	Clip end 1/4 ID	front carburetter
			alternatively use:	
			102.054 + 102.874	
30	**102.055**	**1**	Bolt, clip clamping	front carburetter
31	**102.057**	**1**	Nut	
32	**102.056**	**1**	Washer	
33	**102.861**	**1**	Lever, throttle stop - front	illustrated
	102.860	**1**	Lever, throttle stop - rear	not illustrated
34	**102.046**	**2**	Taper pin	
35	**102.628**	**3**	Adjusting screw	
36	**102.721**	**3**	Spring, adjusting screw	
37	**102.075**	**2**	Centre nut	
38	**102.076**	**2**	Washer	
39	**134.431**	**2**	Overflow pipe	
40	**102.078**	**2**	Washer, fibre	
41	**102.072**	**2**	Needle & seat	standard
	102.156	**2**	Needle & seat	viton point
	102.216	**2**	Needle & seat, see page 25	Grose jet
42	**102.854**	**2**	Cover, float chamber	
43	**102.853**	**2**	Lever, float	
44	**102.074**	**2**	Pin, float lever	
45	**102.491**	**2**	Float	
46	**102.852**	**2**	Gasket, float lid	
47	**102.857**	**1**	Float chamber, front	
	102.858	**1**	Float chamber, rear	
48	**102.067**	**4**	Washer, rubber	
49	**102.369**	**2**	Washer	early type
50	**102.060**	**2**	Mounting bolt	early type
51	**102.062**	**2**	Mounting pillar	improved type
52	**102.063**	**2**	Upper washer	improved type
53	**102.064**	**4**	Washer, rubber support	improved Type
54	**161.122**	**2**	Nut	improved type

© Van Gestel C&B 1997

HS2 carburettor parts

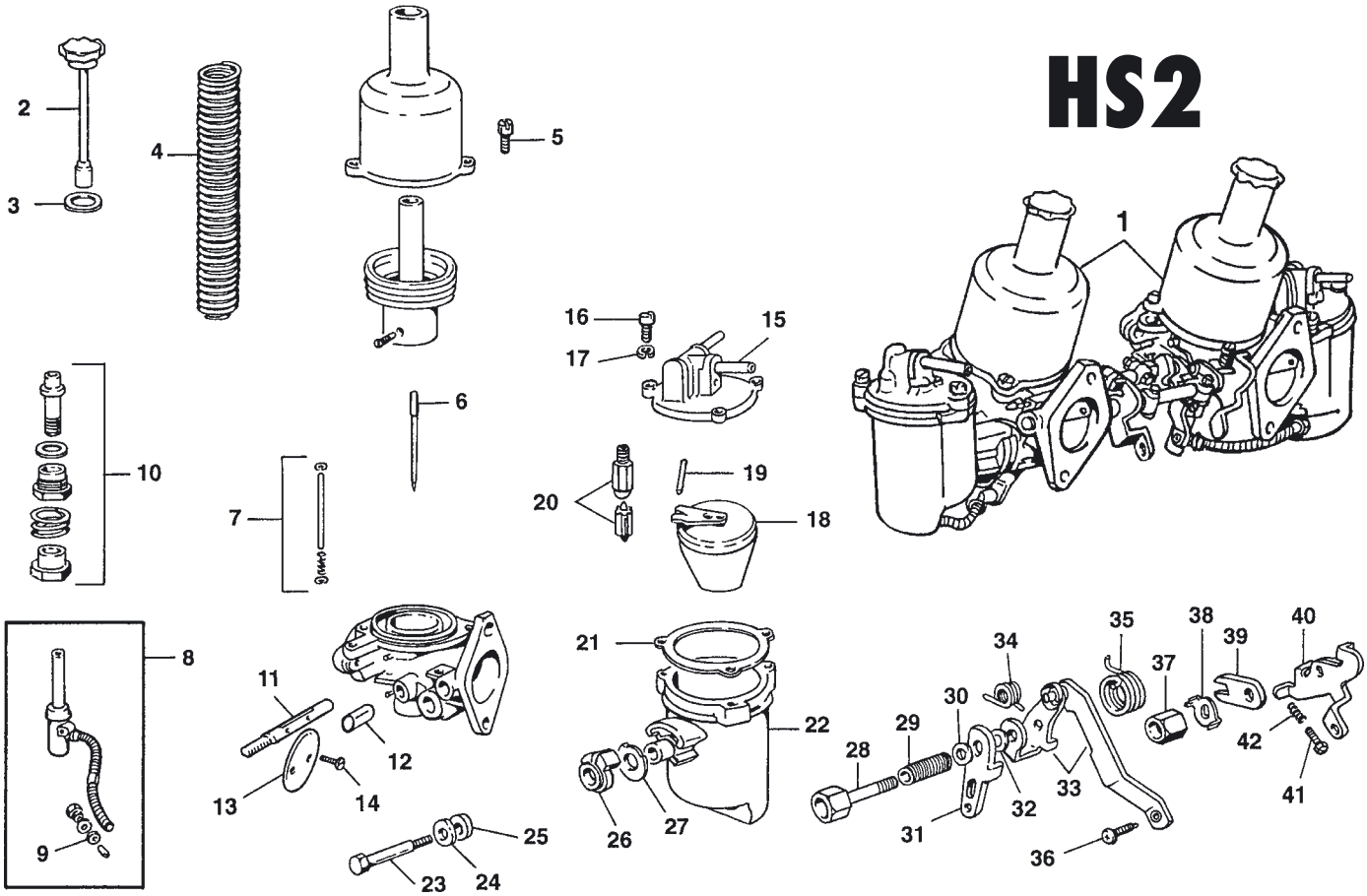

ILL N°	PART N°	QTY	DESCRIPTION	APPLICATION
1	**102.866**	**1**	Pair carburetters	948cc
	102.662	**1**	Pair carburetters	1098cc
2	**102.008**	**2**	Damper assembly	
3	**102.080**	**2**	Washer, fibre	
4	**102.178**	**2**	Spring, blue code	
5	**102.012**	**4**	Screw, cover to body	
	164.015	**4**	Washer, spring	
6	**102.863**	**2**	Needle V3	948cc standard
	102.489	**2**	Needle V2	948cc rich
	102.474	**2**	Needle GX	948cc weak
	102.230	**2**	Needle GY	1098cc standard
	102.477	**2**	Needle M	1098cc rich
	102.473	**2**	Needle GG	1098cc weak
7	**102.591**	**2**	Kit, piston lifting	
8	**102.127**	**1**	Jet, front	
	102.146	**1**	Jet, rear	
9	**102.440**	**2**	Rubber seal	
10	**102.406**	**2**	Jet bearing kit	
11	**102.518**	**2**	Spindle	
12	**102.113**	**4**	Repair bush, ream body bosses to 9.5 mm.	
	102.401	**1**	Reamer tool	
13	**102.208**	**2**	Disc, 1.1/4"	
14	**102.050**	**4**	Screw	
15	**102.408**	**1**	Foat lid, front	
	102.673	**1**	Float lid, rear	
16	**102.012**	**6**	Screw	
17	**164.015**	**6**	Washer, spring	
18	**102.107**	**2**	Float	
19	**102.074**	**2**	Float pin	

ILL N°	PART N°	QTY	DESCRIPTION	APPLICATION
20	**102.072**	**2**	Needle & seat	standard
	102.156	**2**	Needle & seat	viton point
	102.216	**2**	Grose jet	see page 25
21	**102.237**	**2**	Gasket	
22	**102.117**	**2**	Float chamber	
23	**102.563**	**2**	Bolt, float chamber	
24	**102.121**	**2**	Washer, steel	
25	**102.120**	**2**	Washer, rubber	
26	**102.119**	**1**	Grommet, front-grey	
	102.141	**1**	Grommet, rear-green	
27	**102.118**	**2**	Washer	
28	**102.136**	**2**	Pivot bolt	
29	**102.134**	**2**	Spacer	
30	**102.135**	**2**	Washer, spring	
31	**102.677**	**1**	Lever cam, front	
	102.678	**1**	Lever cam, rear	
32	**102.133**	**2**	Washer	
33	**102.675**	**1**	Pick up lever & link, front	
	102.676	**1**	Pick up lever & link, rear	
34	**102.864**	**1**	Cam lever spring, front	
	102.865	**1**	Cam lever spring, rear	
35	**102.130**	**1**	Pick up lever spring, front	
	102.145	**1**	Pick up lever spring, rear	
36	**102.594**	**2**	Screw, link to jet (ill. n° 8)	
37	**102.116**	**2**	Hollow nut	
38	**102.426**	**2**	Tab washer	
39	**102.115**	**2**	Lever, lost motion	
40	**102.674**	**1**	Throttle lever, front	
	102.139	**1**	Throttle lever, rear	
41	**102.110**	**4**	Adjusting screw	
42	**102.045**	**4**	Adjusting spring	

© Van Gestel C&B 1997

Clutch components

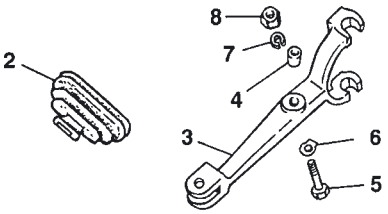

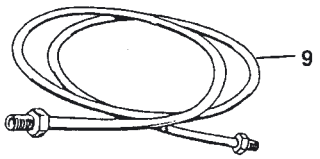

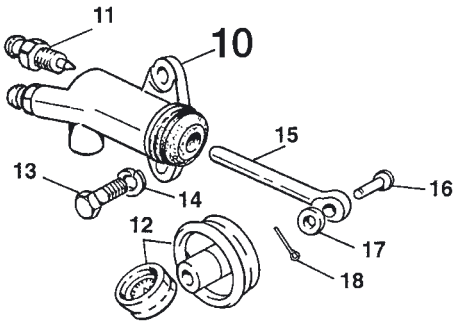

Sprite MK I-II & Midget MK I

948 cc to eng. 9CG DAH 2139
04-'58 to 07-'61
158 mm dia

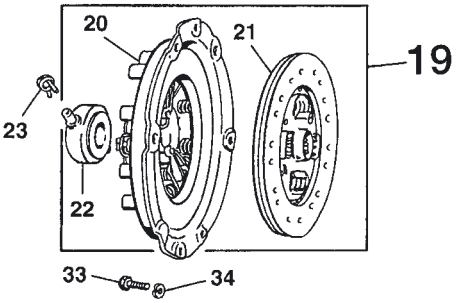

Sprite MK II & Midget MK I

948 cc from eng. 9CG DAH 2140
07-'61 to 10-'62
158 mm dia with thicker pressure plate

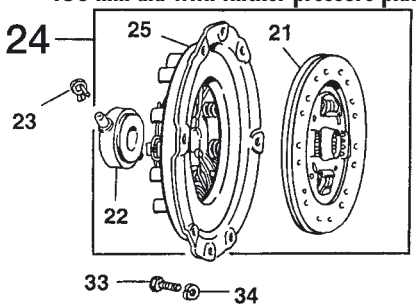

Sprite MK II & Midget MK I

1098 cc to eng. 10CG DAH 10343
10-'62 to 05-'63
184 mm dia

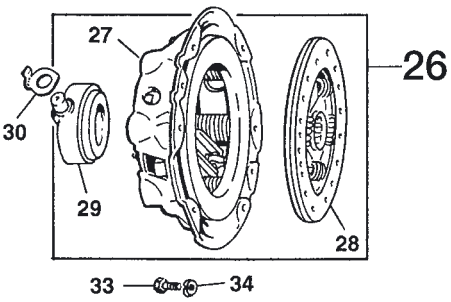

Sprite MK I-II & Midget MK I

1098 cc from eng. 10CG DAH 10344
05-'63 to 01-'64
184 mm dia

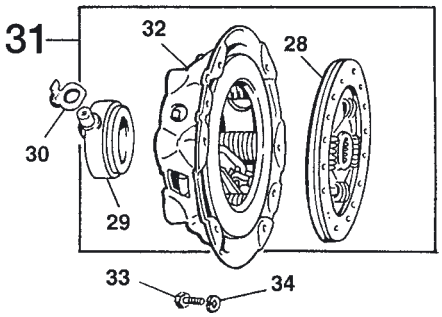

ILL N°	PART N°	QTY	DESCRIPTION	APPLICATION		ILL N°	PART N°	QTY	DESCRIPTION	APPLICATION	
1	**200.615**	**1**	Clutch alignment tool			16	**172.089**	**1**	Clevis pin		
2	**023.004**	**1**	Clutch fork gaiter			17	**163.001**	**1**	Washer, plain		
3	**023.540**	**1**	Clutch fork, 948cc	Sprite MK1-2 to 9CG DAH2139		18	**172.294**	**1**	Split pin		
	023.540	**1**	Clutch fork, 948cc	Midget MK1 to 9CG DAH2139		19	**021.100**	**1**	Clutch kit, 3 piece	to 07-'61	158mm
	027.274	**1**	Clutch fork, 948cc	Sprite MK2 from 9CG DAH2140		20	**021.018**	**1**	Clutch cover	to 07-'61	
	027.274	**1**	Clutch fork, 948cc	Midget MK1 from 9CG DAH2140		21	**021.020**	**1**	Clutch disc	to 10-'62	158mm
	023.791	**1**	Clutch fork	all 1098cc		22	**021.021**	**1**	Release bearing	to 10-'62	
4	**023.541**	**1**	Bush, clutch fork			23	**027.273**	**2**	Clip, release bearing	to 10-'62	
5	**023.574**	**1**	Pivot bolt			24	**021.101**	**1**	Clutch kit, 3 piece	07-'61 to 10-'62	158mm
6	**023.542**	**1**	Lock tab			25	**021.019**	**1**	Clutch cover	07-'61 to 10-'62	
7	**164.002**	**1**	Washer, spring			26	**021.102**	**1**	Clutch kit, 3 piece	10-'62 to 05-'63	184mm
8	**161.012**	**1**	Nut, nylolock			27	**021.022**	**1**	Clutch cover	10-'62 to 05-'63	
9	**054.386**	**1**	LHD Clutch pipe			28	**021.024**	**1**	Clutch plate	10-'62 to 01-'64	184mm
	054.387	**1**	RHD Clutch pipe			29	**021.098**	**1**	Release brearing	10-'62 to 01-'64	
10	**027.070**	**1**	Clutch slave cylinder			30	**172.501**	**2**	Clip, release bearing	10-'62 to 01-'64	
11	**052.028**	**1**	Bleed screw			31	**021.103**	**1**	Clutch kit, 3 piece	05-'63 to 01-'64	184mm
12	**027.072**	**1**	Repair kit			32	**021.023**	**1**	Clutch cover	05-'63 to 01-'64	
13	**162.964**	**2**	Bolt, UNC			33	**162.005**	**6**	Screw, cover to flywheel		
14	**164.006**	**2**	Washer, spring			34	**164.002**	**6**	Washer, spring		
15	**027.006**	**1**	Push rod								

© Van Gestel C&B 1997

Gearbox assembly & remote control

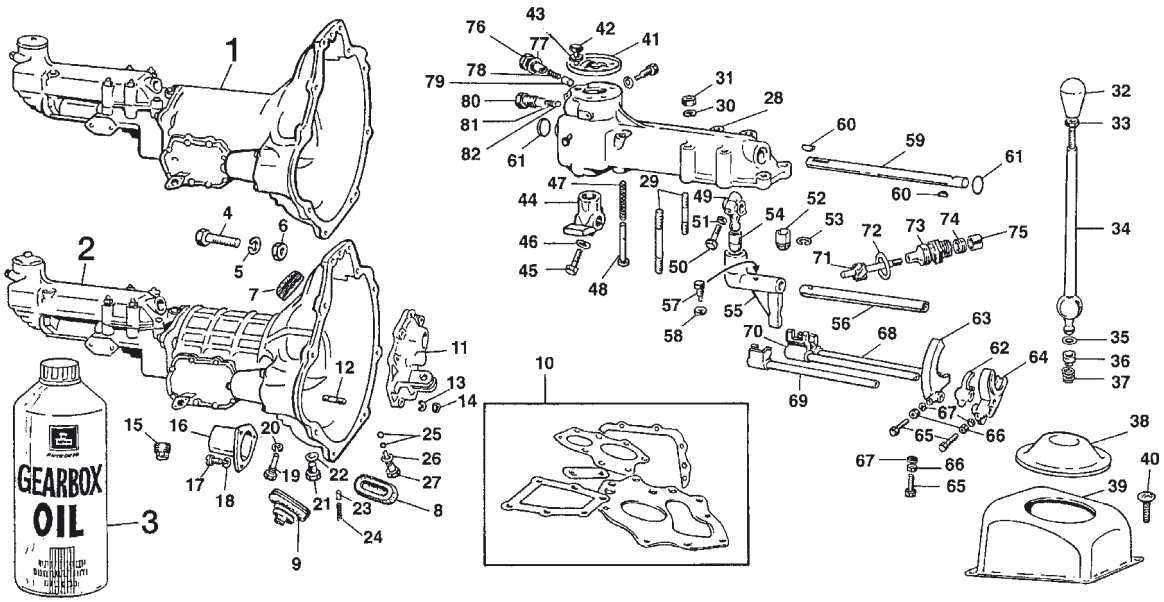

ILL N°	PART N°	QTY	DESCRIPTION	APPLICATION
1	**020.024**	**1**	Gearbox assembly, rebuild 'Smooth Case'	948cc
2	**020.025**	**1**	Gearbox assembly, rebuild 'Ribbed Case'	1098cc
3	**300.111**	**2**	1L Gear oil, HPR30 , Penrite	Capacity is 1.3 L.
	300.522	**1**	4.5L Castrol Classic 20W50	Capacity is 1.3 L.
4	**162.577**	**8**	Bolt, gearbox to engine	948cc 1.1/8" lenght
	162.128	**8**	Bolt, gearbox to engine	1098cc 1.3/8" lenght
5	**164.002**	**8**	Washer, spring	
6	**161.002**	**3**	Nut	
7	**023.507**	**1**	Dust plug, upper	Ribbed case only
8	**122.223**	**1**	Dust plug, LH lower	
9	**023.004**	**1**	Dust gaiter, fork	
10	**016.423**	**1**	Gearbox gasket set	
11	**023.529**	**1**	Front cover plate	948cc
	023.634	**1**	Front cover plate	1098cc
12	**167.136**	**15**	Stud, front & side cover	
13	**164.012**	**15**	Washer, spring	
14	**161.019**	**15**	Nut	
15	**023.001**	**2**	Drain or filler cap	
16	**133.845**	**1**	Starter pinion cover	
17	**162.720**	**3**	Screw	
18	**164.012**	**3**	Washer, spring	
19	**023.567**	**1**	Lock screw, reverse shaft	
20	**164.012**	**1**	Washer, spring	
21	**023.360**	**1**	Plugner, reverse	
22	**168.095**	**1**	Washer, sealing	
23	**023.172**	**3**	Plugner	
24	**023.028**	**3**	Spring, plugner	
25	**023.027**	**2**	Ball, selector shaft interlock	
26	**168.095**	**1**	Washer, sealing	
27	**023.576**	**1**	Plug, interlock	
28	**020.080**	**1**	Casing, remote control	948cc
	023.623	**1**	Casing, remote control	1098cc
29	**167.137**	**2**	Stud, short	
	167.138	**6**	Stud, long	
30	**164.002**	**8**	Washer, spring	
31	**161.002**	**8**	Nut	
32	**023.469**	**1**	Gearlever knob, original	
33	**161.398**	**1**	Lock nut	
34	**023.585**	**1**	Lever, change speed	streaght 948cc
	023.624	**1**	Lever, change speed	curved 1098cc
35	**023.586**	**1**	'O' Ring	
36	**023.589**	**1**	Buttom	
37	**023.590**	**1**	Spring	
38	**121.142**	**1**	Rubber, gaiter	
39	**133.964**	**1**	Cover	
40	**162.157**	**4**	Screw, pozi drive	
41	**023.587**	**1**	Retaining plate	
42	**162.029**	**3**	Screw, retaining plate	
43	**164.012**	**3**	Washer, spring	
44	**023.591**	**1**	Lever, rear selector	
45	**162.721**	**1**	Screw, locking	
46	**164.002**	**1**	Washer, spring	
47	**023.102**	**1**	Spring, reverse plugner	
48	**023.152**	**1**	Plugner, reverse	
49	**023.593**	**1**	Lever, front selector	
50	**162.065**	**1**	Screw, clamping	
51	**164.012**	**1**	Washer, spring	
52	**023.506**	**1**	Bush, in halves	948cc to 14494
53	**023.022**	**1**	Clip for bushes	948cc to 14494
54	**023.506**	**1**	Bush	
55	**023.579**	**1**	Control lever	948cc
	023.622	**1**	Control lever	1098cc
56	**023.578**	**1**	Shaft, control	948cc
	023.621	**1**	Shaft, control	1098cc
57	**023.150**	**2**	Locator, shaft	
58	**164.012**	**2**	Washer, spring	
59	**024.282**	**1**	Shaft, selector arm	
60	**172.014**	**2**	Key	
61	**023.155**	**2**	Core plug	
62	**023.572**	**1**	Fork, reverse	
63	**023.568**	**1**	1st & 2nd Selector fork	948cc
	024.001	**1**	1st & 2nd Selector fork	1098cc
64	**023.570**	**1**	3rd & 4th Selector fork	948cc
	023.601	**1**	3rd & 4th Selector fork	1098cc
65	**162.087**	**3**	Locking screw	
66	**023.025**	**3**	Locking nut	
67	**164.007**	**3**	Washer, star	
68	**023.573**	**1**	Rod, reverse fork	948cc
	023.598	**1**	Rod, reverse fork	1098cc
69	**023.569**	**1**	1st & 2nd Speed rod	948cc
	023.600	**1**	1st & 2nd Speed rod	1098cc
70	**023.571**	**1**	3rd & 4th Speed rod	948cc
	023.602	**1**	3rd & 4th Speed rod	1098cc
71	**023.580**	**1**	Speedo pinion	
72	**023.066**	**1**	Gasket, copper	Sprite MK1 only
73	**023.063**	**1**	Pinion retainer, brass	Sprite MK1
	024.283	**1**	Pinion retainer, nylon	Sprite MK1
	023.581	**1**	Pinion retainer alternative for Sprite MK1	Sprite MK2 & Midget MK1
74	**016.050**	**1**	Oil seal	
75	**023.065**	**1**	Retainer, oil seal	
76	**024.284**	**1**	Cap, Sprite MK1	up to H25508
	023.253	**1**	Cap	from H25508
77	**168.013**	**1**	Washer	
78	**023.106**	**1**	Spring	
79	**023.105**	**1**	Plugner, Sprite MK1	up to H25508
	023.356	**1**	Plugner	
80	**023.400**	**1**	Plugner, reverse	
81	**023.028**	**1**	Spring	
82	**023.027**	**1**	Ball	

© Van Gestel C&B 1997

Gearbox internal

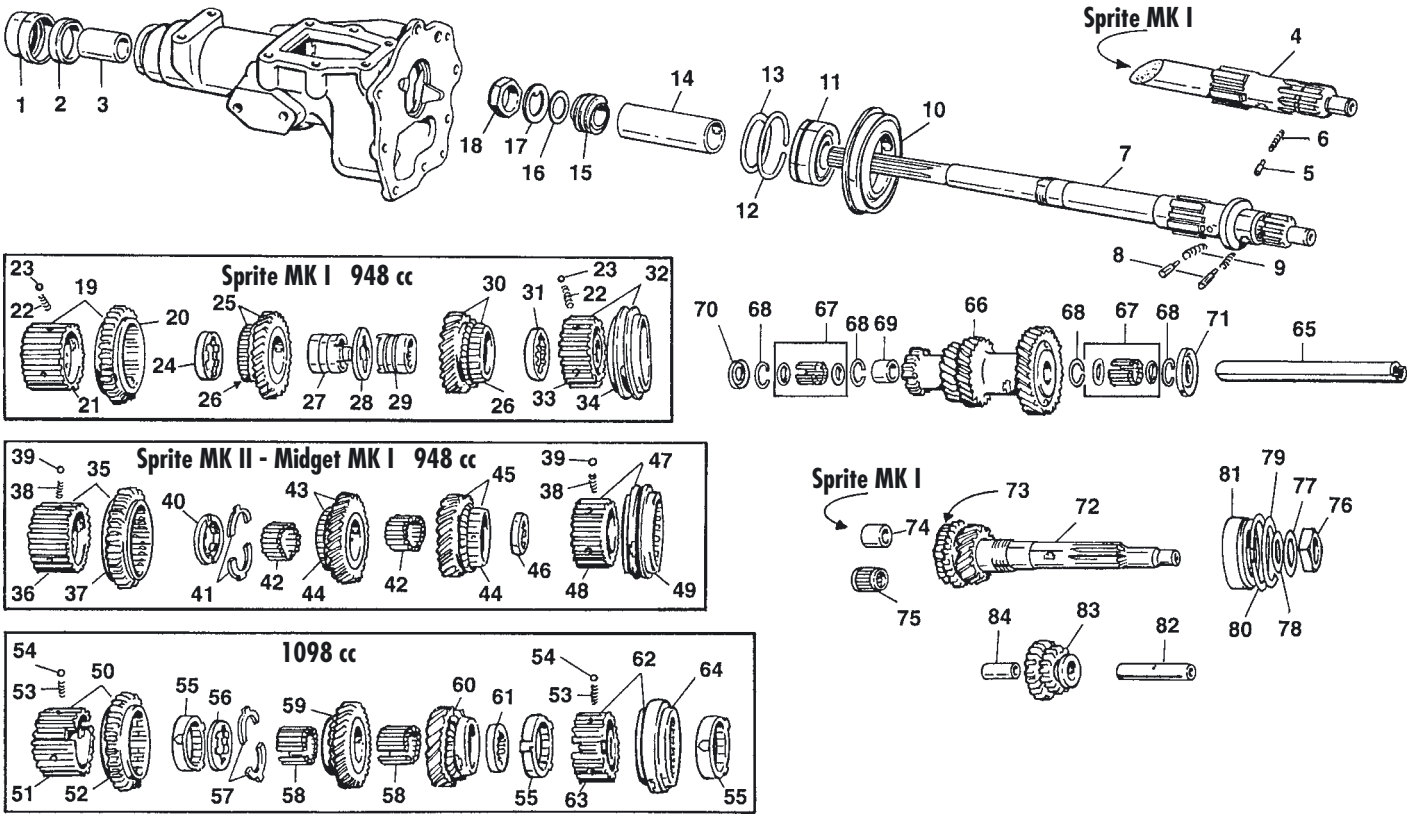

ILL N°	PART N°	QTY	DESCRIPTION	APPLICATION
1	**023.417**	**1**	Oil seal & dust cap	all
2	**024.285**	**1**	Washer, joint	948cc only
3	**023.577**	**1**	Bush	all
4	**023.548**	**1**	Main shaft	Sprite MK1
5	**023.555**	**1**	Peg, thrust washer	
6	**023.554**	**1**	Spring, peg	
7	**023.548**	**1**	Main shaft	948cc Sprite MK2
	023.606	**1**	Main shaft	1098cc
8	**023.555**	**A/R**	Peg, locating	
9	**023.554**	**2**	Spring	948cc
	023.612	**2**	Spring	1098cc
10	**023.561**	**1**	Housing, bearing	948cc
	023.617	**1**	Housing, bearing	1098cc
11	**023.533**	**1**	Bearing, main shaft	948cc
	023.618	**1**	Bearing, main shaft	1098cc
12	**023.534**	**1**	Ring for bearing	all
13	**023.535**	**A/R**	Shim .1016mm	all
	023.536	**A/R**	Shim .1524mm	all
	023.537	**A/R**	Shim .254 mm	all
14	**023.562**	**1**	Spacer tube	948cc
	023.619	**1**	Spacer tube	1098cc
15	**023.563**	**1**	Wheel, speedometer	all
16	**023.564**	**1**	Washer	all
17	**023.538**	**1**	Washer, lock	all
18	**023.539**	**1**	Nut	all
19	**024.286**	**1**	1st Speed & 2nd synchro	948cc Sprite MK1
20	**024.287**	**1**	1st Speed (outer only)	948cc Sprite MK1
21	**024.288**	**1**	2nd Synchro (inner only)	948cc Sprite MK1
22	**023.550**	**6**	Spring	948cc Sprite MK1
23	**025.045**	**6**	Ball	948cc Sprite MK1
24	**024.127**	**1**	Thrust washer, rear	948cc Sprite MK1
25	**024.289**	**1**	2nd Speed gear & synchro	948cc Sprite MK1
26	**023.804**	**2**	Synchro cone only	948cc Sprite MK1
27	**024.126**	**1**	Bush, 2nd speed gear	948cc Sprite MK1
28	**024.125**	**1**	Ring, interlocking 2-3	948cc Sprite MK1
29	**024.124**	**1**	Bush, 3rd speed gear	948cc Sprite MK1
30	**024.290**	**1**	3rd Speed gear & synchro	948cc Sprite MK1
31	**024.120**	**A/R**	Front thrust washer 5.40mm	948cc Sprite MK1
	024.121	**A/R**	Front thrust washer 5.45mm	948cc Sprite MK1
	024.122	**A/R**	Front thrust washer 5.50mm	948cc Sprite MK1
	024.123	**A/R**	Front thrust washer 5.55mm	948cc Sprite MK1
32	**023.824**	**1**	Synchroniser assembly 3-4	948cc Sprite MK1
33	**024.291**	**1**	Synchroniser only	948cc Sprite MK1
34	**023.560**	**1**	Sleeve (outer)	948cc Sprite MK1
35	**023.549**	**1**	1st Speed & synchro.	948cc Sprite MK2 & Midget
36	**024.292**	**1**	Synchronizer	948cc Sprite MK2 & Midget
37	**024.293**	**1**	1st Speed (outer)	948cc Sprite MK2 & Midget
38	**023.550**	**6**	Spring	948cc Sprite MK2 & Midget
39	**025.045**	**6**	Ball	948cc Sprite MK2 & Midget
40	**023.553**	**1**	Collar, locking	948cc Sprite MK2 & Midget
41	**023.556**	**2**	Washer, half	948cc Sprite MK2 & Midget
42	**023.552**	**56**	Needle roller	948cc Sprite MK2 & Midget
43	**023.551**	**1**	2nd Speed & synchro.	948cc Sprite MK2 & Midget
44	**023.804**	**2**	Synchro cone	948cc Sprite MK2 & Midget
45	**024.294**	**1**	3rd Speed & synchro.	948cc Sprite MK2 & Midget
46	**023.557**	**1**	Collar, locking	948cc Sprite MK2 & Midget
47	**023.559**	**1**	3rd & 4th Synchronizer 948cc	Sprite MK2 & Midget
48	**024.295**	**1**	Synchronizer only 3-4 948cc	Sprite MK2 & Midget
49	**024.296**	**1**	Sleeve, coupling	948cc Sprite MK2 & Midget
50	**023.616**	**1**	1st Speed & synchro	1098cc
51	**024.297**	**1**	Synchronizer(inner)	1098cc
52	**024.298**	**1**	1st Speed (outer)	1098cc
53	**023.609**	**6**	Spring	1098cc
54	**025.045**	**6**	Ball	1098cc
55	**023.419**	**3**	Synchro ring	1098cc
56	**023.615**	**1**	Collar, locking	1098cc
57	**023.614**	**2**	Washer, halves	1098cc
58	**023.509**	**52**	Needle roller	1098cc
59	**023.613**	**1**	2nd Speed gear	1098cc
60	**023.610**	**1**	3rd Speed gear	1098cc
61	**023.611**	**1**	Collar locking	1098cc
62	**023.607**	**1**	Sinchronizer 3-4	1098cc
63	**024.299**	**1**	Inner piece	1098cc
64	**024.300**	**1**	Sleeve, outer piece	1098cc
65	**023.604**	**1**	Layshaft	all
66	**023.525**	**1**	Laygear	948cc Sprite MK1
	024.301	**1**	Laygear	948cc Sprite MK2 & Midget
	023.605	**1**	Laygear	1098cc
67	**023.526**	**2**	Bearing assembly	all
68	**023.528**	**4**	Circlip	all
69	**023.527**	**1**	Distance piece	all

© Van Gestel C&B 1997

Gearbox internal parts

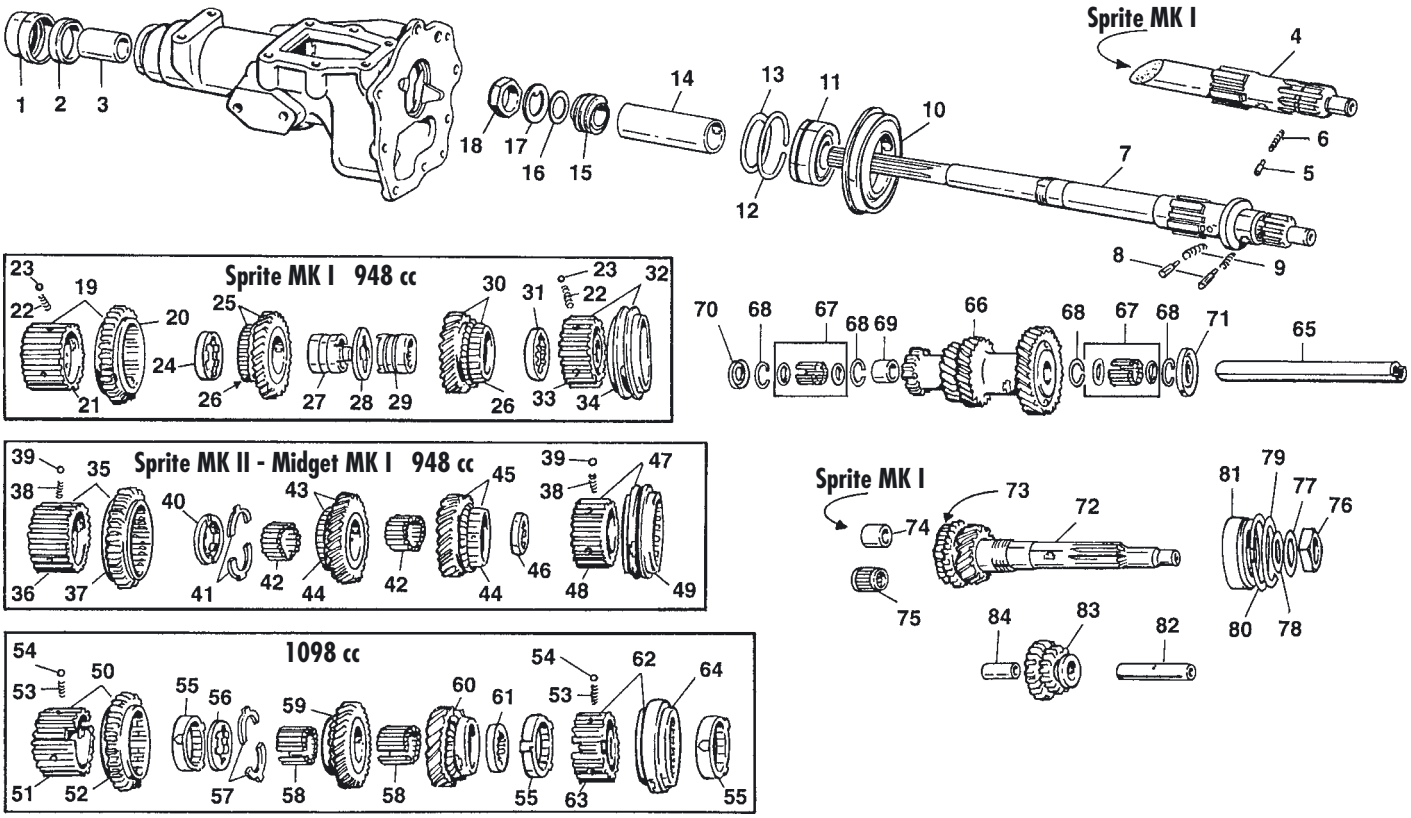

ILL N°	PART N°	QTY	DESCRIPTION	APPLICATION
70	**023.544**	**A/R**	Thrust washer, rear 3.13mm	all
	023.545	**A/R**	Thrust washer, rear 3.18mm	all
	023.546	**A/R**	Thrust washer, rear 3.23mm	all
	023.547	**A/R**	Thrust washer, rear 3.31mm	all
71	**023.543**	**1**	Thrust washer, front	all
72	**023.825**	**1**	1st Motion shaft & synchro	948cc Sprite MK1
	023.531	**1**	1st Motion shaft & syn.948cc	Sprite MK2 & Midget
	023.603	**1**	1st Motion shaft	1098cc
73	**023.804**	**1**	Synchro ring, only	948cc
74	**023.704**	**1**	Bush	948cc Sprite MK1
75	**023.532**	**1**	Bearing	948cc & 1098cc Sprite MK2 & Midget

ILL N°	PART N°	QTY	DESCRIPTION	APPLICATION
76	**023.539**	**1**	Nut	all
77	**023.538**	**1**	Washer, lock	all
78	**023.564**	**1**	Washer, plain	all
79	**023.535**	**A/R**	Shim .1016mm	all
	023.536	**A/R**	Shim .1524mm	all
	023.537	**A/R**	Shim .2540mm	all
80	**023.534**	**1**	Circlip, bearing	all
81	**023.533**	**1**	Bearing	all
82	**023.565**	**1**	Shaft, reverse gear	all
83	**023.566**	**1**	Reverse gear	948cc
	023.620	**1**	Reverce gear	1098cc
84	**024.007**	**1**	Bush	allAR

Propshaft

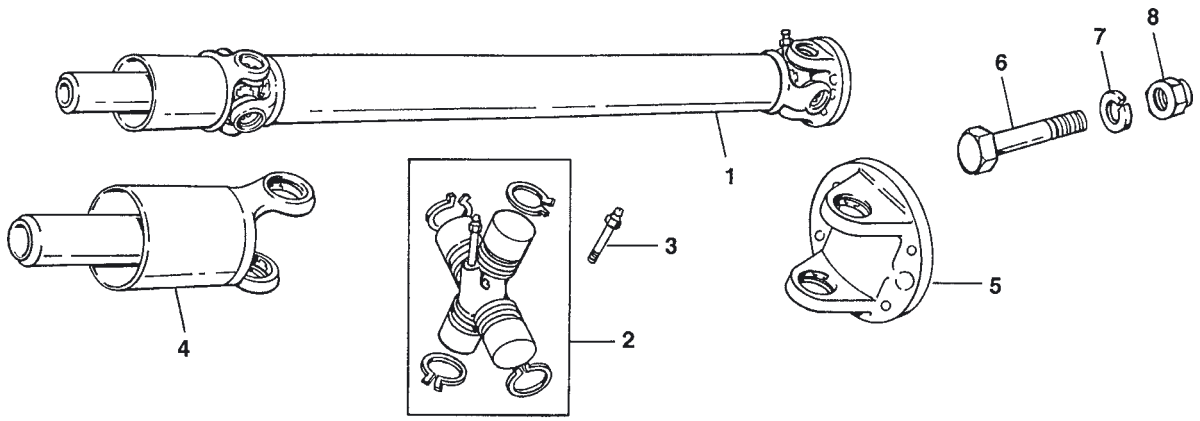

ILL N°	PART N°	QTY	DESCRIPTION	APPLICATION
1	**134.490**	**1**	Propshaft assembly	
2	**032.045**	**2**	Universal joint	
3	**032.046**	**2**	Grease nipple, long	
4	**032.481**	**1**	Sleeve, front	

ILL N°	PART N°	QTY	DESCRIPTION	APPLICATION
5	**032.683**	**1**	Yoke end, rear	
6	**162.035**	**4**	Bolt	
7	**164.002**	**4**	Washer, spring	
8	**161.012**	**4**	Nut, nylon locking	

© Van Gestel C&B 1997

Front suspension

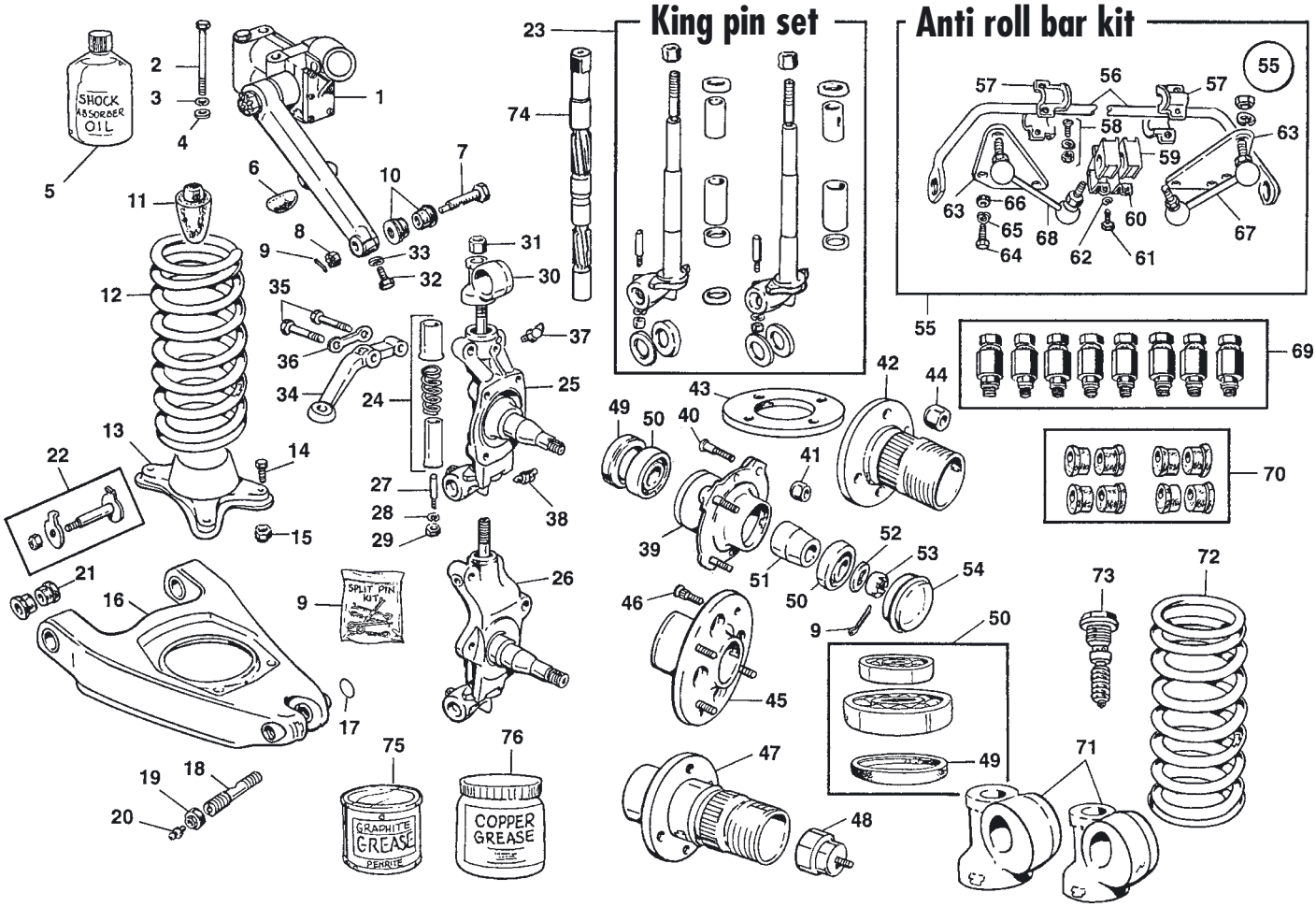

ILL N°	PART N°	QTY	DESCRIPTION	APPLICATION
1	**042.170**	**1**	RH Front shock absorber	New from Armstrong
	042.171	**1**	LH Front shock absorber	New from Armstrong
2	**162.113**	**6**	Bolt	
3	**164.006**	**6**	Washer, spring	
4	**163.005**	**6**	Washer, plain	
5	**330.001**	**1**	1/2 L. Shock oil, standard	
	330.002	**1**	1/2 L. Shock oil, competition	
6	**041.176**	**2**	Rebound buffer	
7	**041.175**	**2**	Fulcrum pin	
8	**161.465**	**2**	Nut	
9	**041.121**	**1**	Split pin kit	
10	**041.174**	**4**	Top bush, rubber/metal	STD specification
	041.516	**4**	Top bush, polyurethan/metal	High performance
11	**041.177**	**2**	Suspension buffer	
12	**042.165**	**2**	Road spring	STD specification
13	**041.178**	**2**	Spring seat	
14	**162.396**	**8**	Screw, spring seat to pan	
15	**161.012**	**8**	Nut, nyloc	
16	**042.230**	**2**	Wishbone pan	New, not rebuild
17	**041.166**	**2**	Blanking plug	
18	**041.167**	**2**	Fulcrum pin, lower	
19	**041.168**	**2**	Screwed plug	
20	**041.066**	**2**	Grease nipple	
21	**041.056**	**8**	Bush, wishbone to shassis made from rubber	STD specification
	041.511	**4**	Bush, wishbone to shassis made from polyurethane	High performance
22	**041.173**	**4**	Inner fulcrum bolt kit	

ILL N°	PART N°	QTY	DESCRIPTION	APPLICATION
23	**042.229**	**1**	Pair king pin kit drum brake model	04/'58 up to 09/'62
	042.228	**1**	Pair king pin kit disc brake model	from 09/'62
24	**041.690**	**2**	Dust excl. tube & spring set	till 09/'62 - drum br.
	041.157	**2**	Dust excl. tube & spring set	
25	**042.508**	**2**	Stud axle with new bushes & king pin - rebuild exchange	till 09/'62 - drum br.
26	**042.226**	**1**	RH Stub axle with new bushes & king pin - rebuild exchange	from 09/'62 - disc br.
	042.227	**1**	LH Stub axle with new bushes & king pin - rebuild exchange	from 09/'62 - disc br.
27	**041.160**	**2**	Cotter pin	
28	**164.015**	**2**	Washer, spring	
29	**161.024**	**2**	Nut	
30	**041.165**	**2**	Top thrunion	
31	**161.079**	**2**	Nut, nyloc	
32	**162.819**	**2**	Screw, pin clamping	
33	**164.031**	**2**	Washer, shakeproof	
34	**042.506**	**1**	RH Steering arm, 02/'63-on	fit in pairs for cars
	042.507	**1**	LH Steering arm, 02/'63-on	up to HAN 7 28368 and GAN 2 18472
35	**162.394**	**2**	Bolt, short	
	162.395	**2**	Bolt, long	
36	**174.022**	**2**	Lock tab	
37	**041.161**	**2**	Upper grease nipple	
38	**041.161**	**2**	Lower grease nipple	drum brake model
	041.068	**2**	Lower graese nipple	disc brake model

© Van Gestel C&B 1997

Front suspension

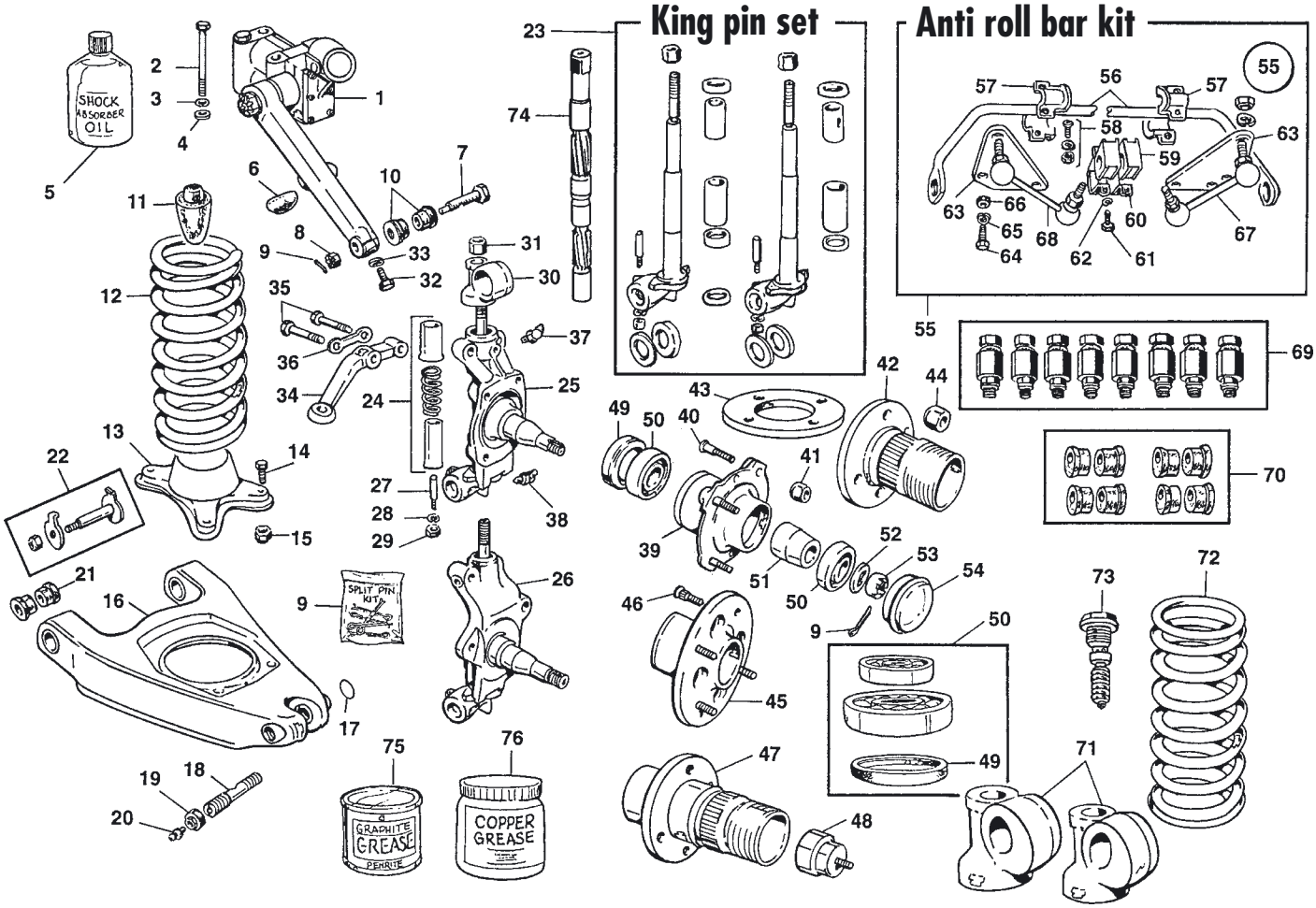

ILL N°	PART N°	QTY	DESCRIPTION	APPLICATION
39	**042.705**	**2**	Hub(less studs)	drum brake model
40	**167.174**	**8**	Stud	drum brake model
41	**161.411**	**8**	Wheel nut	all
42	**042.202**	**1**	RH Conversion hub, 8 PTI	drum brake model
	042.203	**1**	LH Conversion hub, 8 PTI	drum brake model
43	**042.204**	**2**	Spacer for conversion hub	drum brake model
44	**161.124**	**8**	Nut for conversion hub	drum brake model
45	**042.233**	**2**	Hub (less studs)	disc brake model
46	**167.060**	**8**	Wheel stud	disc brake model
47	**042.440**	**1**	RH Wire wheel hub, 12 TPI	disc brake model
	042.441	**1**	LH Wire wheel hub, 12 TPI	disc brake model
	042.126	**1**	RH Wire wheel hub, 8 TPI	disc brake model
	042.127	**1**	LH Wire wheel hub, 8 TPI	disc brake model
48	**041.082**	**2**	Grease cap	
49	**041.171**	**2**	Oil seal	
50	**041.169**	**2**	Bearing & oil seal kit	
51	**041.170**	**2**	Bearing spacer	
52	**041.172**	**2**	Washer	
53	**161.271**	**2**	Nut	
54	**041.073**	**2**	Grease cap	
55	**042.722**	**1**	Anti-Roll Bar Kit5 /8" for fast road & competition	all models
56	**042.630**	**1**	Anti-Roll bar 9/16"	for normal road use
	042.234	**1**	Anti-Roll bar 5/8"	fast road use
	042.548	**1**	Anti-Roll bar 11/16"	Race only
57	**041.061**	**4**	Lockating bracket 9/16"	Alternative for 5/8"
58	**162.060**	**4**	Screw	
	164.015	**4**	Washer, spring	
	161.024	**4**	Nut	
59	**041.058**	**2**	Mounting bush, rubber	9/16"
	041.059	**2**	Mounting bush, rubber	5/8"
	041.645	**2**	Mounting bush, rubber	11/16"

ILL N°	PART N°	QTY	DESCRIPTION	APPLICATION
60	**041.060**	**2**	Bracket	
61	**162.045**	**4**	Screw, bracket to shassis	
62	**164.002**	**4**	Washer, spring	
63	**041.182**	**2**	Mounting bracket	
64	**162.005**	**6**	Screw, bracket to wishbone pan	
65	**164.002**	**6**	Washer, spring	
66	**161.002**	**6**	Nut	
67	**042.175**	**1**	RH Link	
68	**042.176**	**1**	LH Link	
69	**041.567**	**1**	Front Suspension Lowering Kit This spacer set is lowering the car by half an inch. The spacers are fitted between the spring locatores and the wishbone pans.	
70	**041.613**	**1**	Nylatron wishbone bush kit fast road and race use.	
71	**041.652**	**1**	Pair Trunnions for negative camber. Ofsett holes with bronze bushes.	
72	**042.398**	**2**	Front coil spring, 400 lbs Fast road and ralley	
73	**041.650**	**2**	30% Uprated valve for front shock absorbers. These valves should be used with new shock absorbers.	
74	**200.706**	**1**	Reamer tool for king pin bushes	
75	**330.040**	**1**	400 g. Penrite graphite grease	
76	**186.034**	**1**	Copper grease, specially for wire wheel hubs & spinners and for high temperature.	

© Van Gestel C&B 1997

Steering rack

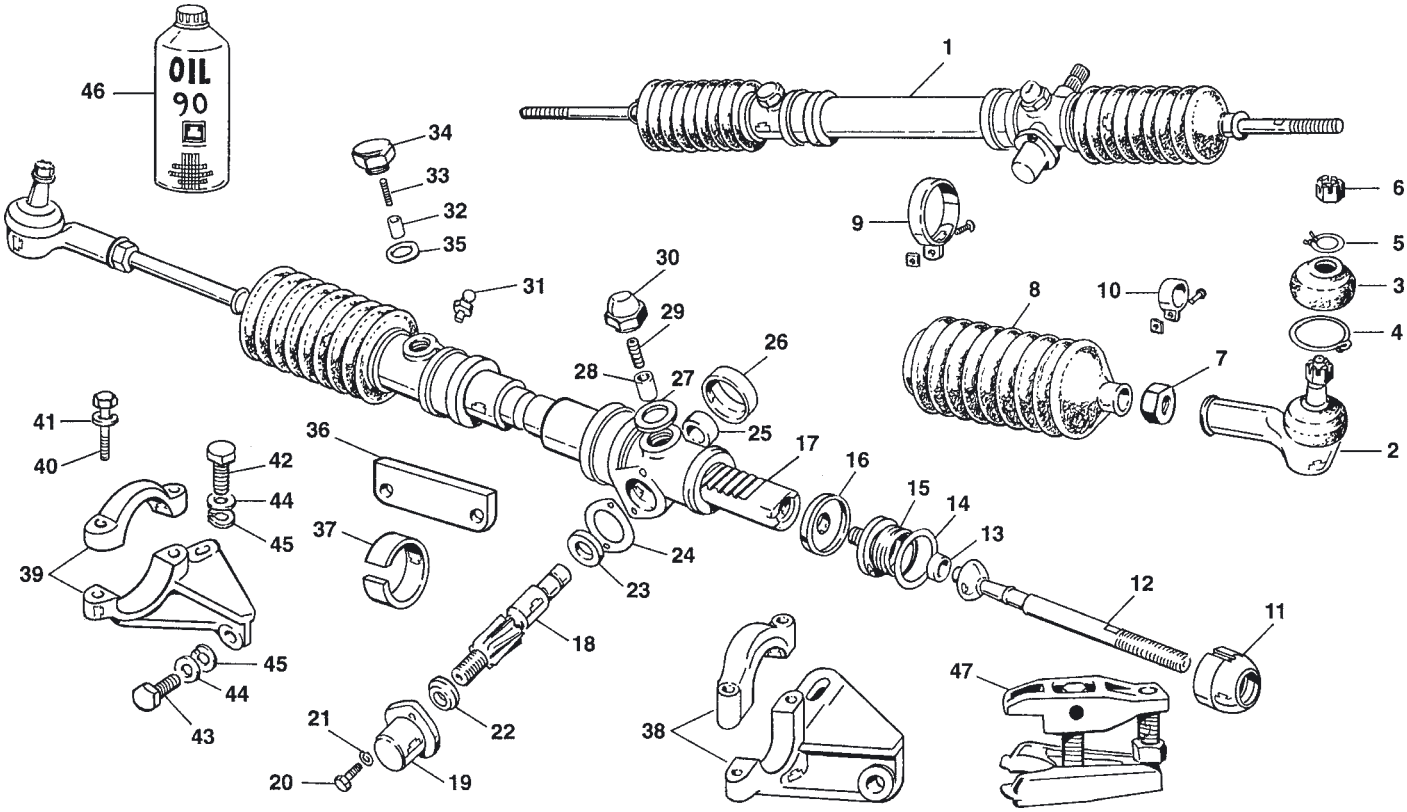

ILL N°	PART N°	QTY	DESCRIPTION	APPLICATION
1	**042.617**	**1**	LHD Steering rack assembly	New
	042.616	**1**	RHD Steering rack assembly	New
2	**043.028**	**2**	Track rod end, assembly	
3	**043.029**	**2**	Dust cap, rubber	
4	**172.124**	**2**	Clip, large	
5	**172.125**	**2**	Clip, small	
6	**161.079**	**2**	Nut, nylock	
	161.043	**2**	Nut, castle	
7	**161.023**	**2**	Lock nut	
8	**043.091**	**2**	Gaiter rubber	
9	**172.047**	**2**	Clip, large	
10	**172.048**	**2**	Clip, small	
11	**043.032**	**2**	Female ball housing	
12	**043.090**	**2**	Tie rod	
13	**043.035**	**2**	Ball seat	
14	**043.033**	**A/R**	Shim, 0.08mm	
	043.034	**A/R**	Shim, 0.12mm	
15	**043.036**	**2**	Male ball housing	
16	**043.037**	**2**	Lock tab	
17	**042.621**	**1**	Rack	
18	**042.623**	**1**	LHD Pinion	
	042.622	**1**	RHD Pinion	
19	**043.359**	**1**	Bottom cover, pinion	
20	**162.225**	**2**	Screw	
21	**164.012**	**2**	Washer, spring	
22	**043.364**	**1**	Lower thrust	
23	**043.363**	**1**	Top thrust	

ILL N°	PART N°	QTY	DESCRIPTION	APPLICATION
24	**043.360**	**A/R**	Shim 0.076mm	
	043.361	**A/R**	Shim 0.127mm	
	043.362	**A/R**	Shim 0.254mm	
25	**043.308**	**1**	Seal, pinion	
26	**043.358**	**1**	Seal cover	
27	**043.022**	**A/R**	Shim 0.08mm	
	043.356	**A/R**	Shim 0.25mm	
28	**043.024**	**1**	Damper, pinion end	
29	**043.023**	**1**	Spring	
30	**043.021**	**1**	Cap	
31	**043.056**	**1**	Oil nipple NOT GREASE	
32	**043.017**	**1**	Secondary damper	
33	**043.016**	**1**	Spring	
34	**043.015**	**1**	Cap	
35	**043.018**	**1**	Washer, packing	
36	**043.366**	**A/R**	Near side packing shim	
37	**043.318**	**2**	Seating, rack to bracket	
38	**043.092**	**1**	RH Bracket	
39	**043.093**	**1**	LH Bracket	
40	**162.971**	**4**	Bolt, bracket cap	
41	**164.002**	**4**	Washer, spring	
42	**162.020**	**2**	Mounting screw	
43	**162.005**	**4**	Mounting screw	
44	**164.002**	**6**	Washer, spring	
45	**163.001**	**6**	Washer, plain	
46	**300.118**	**1**	1L Steering rack oil DO NOT USE GREASE	
47	**200.438**	**1**	Track rod end separator tool	

© Van Gestel C&B 1997

Steering wheels & steering column

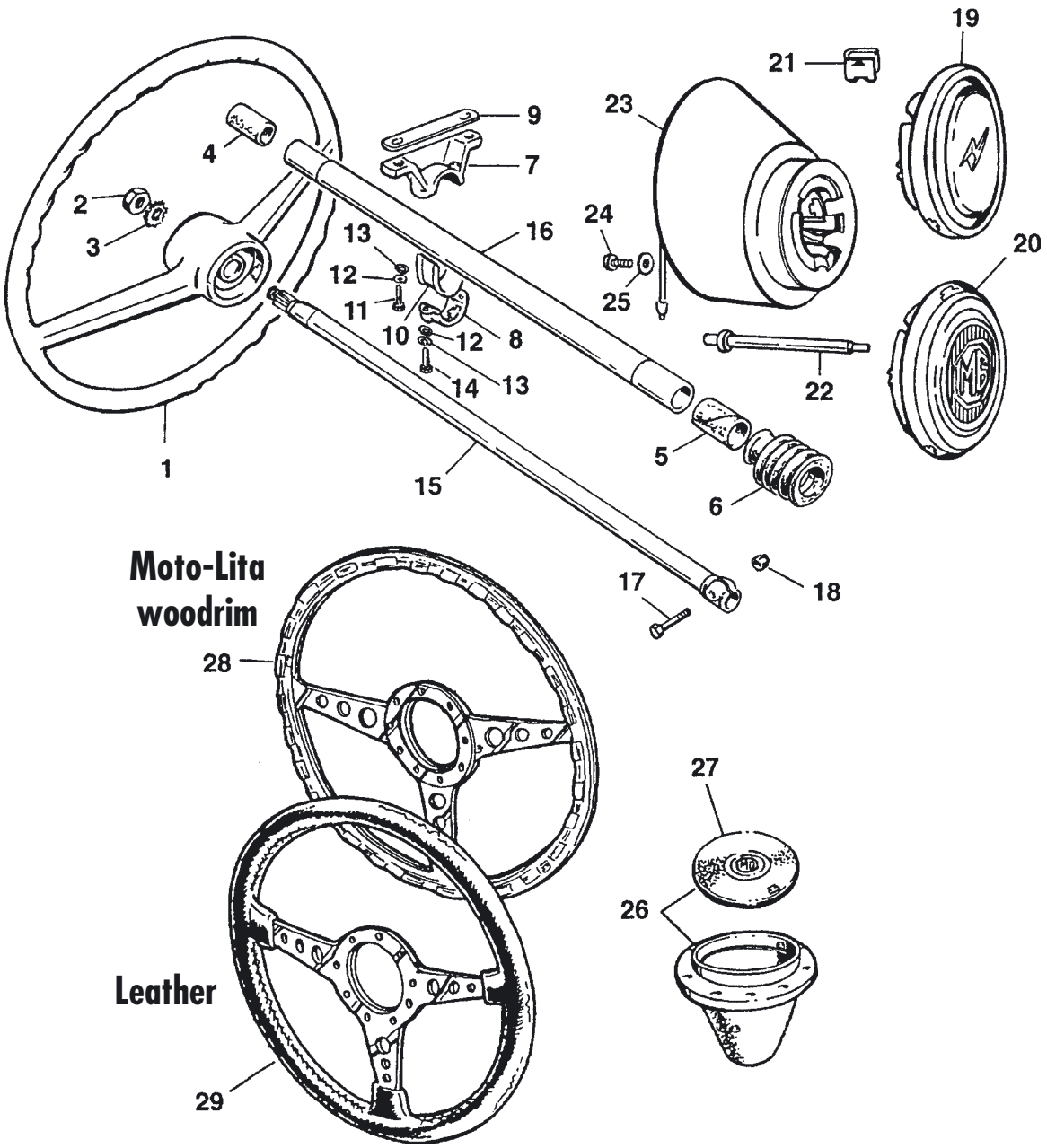

ILL N°	PART N°	QTY	DESCRIPTION	APPLICATION
1	**042.703**	**1**	Steering wheel, black	Sprite
	042.704	**1**	Steering wheel, black	Midget
	042.704	**1**	Steering wheel, black alternative for Sprite	
2	**161.272**	**1**	Nut, steering wheel	
3	**164.034**	**1**	Washer, spring	
4	**043.008**	**1**	Upper bush, felt	
5	**043.058**	**1**	Lower bush, felt	
6	**121.042**	**1**	Dust excluder rubber	
7	**135.653**	**1**	Upper bracket	
8	**135.654**	**1**	Lower bracket	
9	**042.612**	**A/R**	Packing piece	
10	**043.352**	**1**	Sealing rubber	
11	**162.065**	**2**	Screw	
12	**163.097**	**4**	Washer, plain	
13	**164.012**	**4**	Washer, spring	
14	**162.203**	**2**	Screw	
15	**134.488**	**1**	Inner column	
16	**134.489**	**1**	Outer column	
17	**162.968**	**1**	Clamping bolt	
18	**161.511**	**1**	Nut	

ILL N°	PART N°	QTY	DESCRIPTION	APPLICATION
19	**086.183**	**1**	Horn push, Sprite	
20	**086.090**	**1**	Horn push, Midget	
21	**172.165**	**2**	Clip	
22	**083.577**	**1**	Brush, contact stift	
23	**086.079**	**1**	LHD Exstension, excluding slip ring	
	086.353	**1**	RHD Exstension, excluding slip ring	
	086.582	**1**	Slip ring	
24	**162.892**	**3**	Screw	
25	**164.023**	**3**	Washer, spring	
26	**185.462**	**1**	Moto Lita Boss & horn push with Sprite logo	
	185.088	**1**	Moto Lita Boss & horn push with MG logo	
27	**185.159**	**1**	Horn push & logo, Sprite	for Moto Lita boss
	185.158	**1**	Horn push & logo, MG	for Moto Lita boss
28	**185.025**	**1**	Woodrim steering wheel 33 cm	Moto Lita
	185.026	**1**	Woodrim steering wheel 35 cm	Moto Lita
	185.027	**1**	Woodrim steering wheel 38 cm	Moto Lita
29	**185.155**	**1**	Leather steering wheel 33 cm	Moto Lita
	185.156	**1**	Leather steering wheel 35 cm	Moto Lita
	185.157	**1**	Leather steering wheel 38 cm	Moto Lita

© Van Gestel C&B 1997

Rear axle & differential

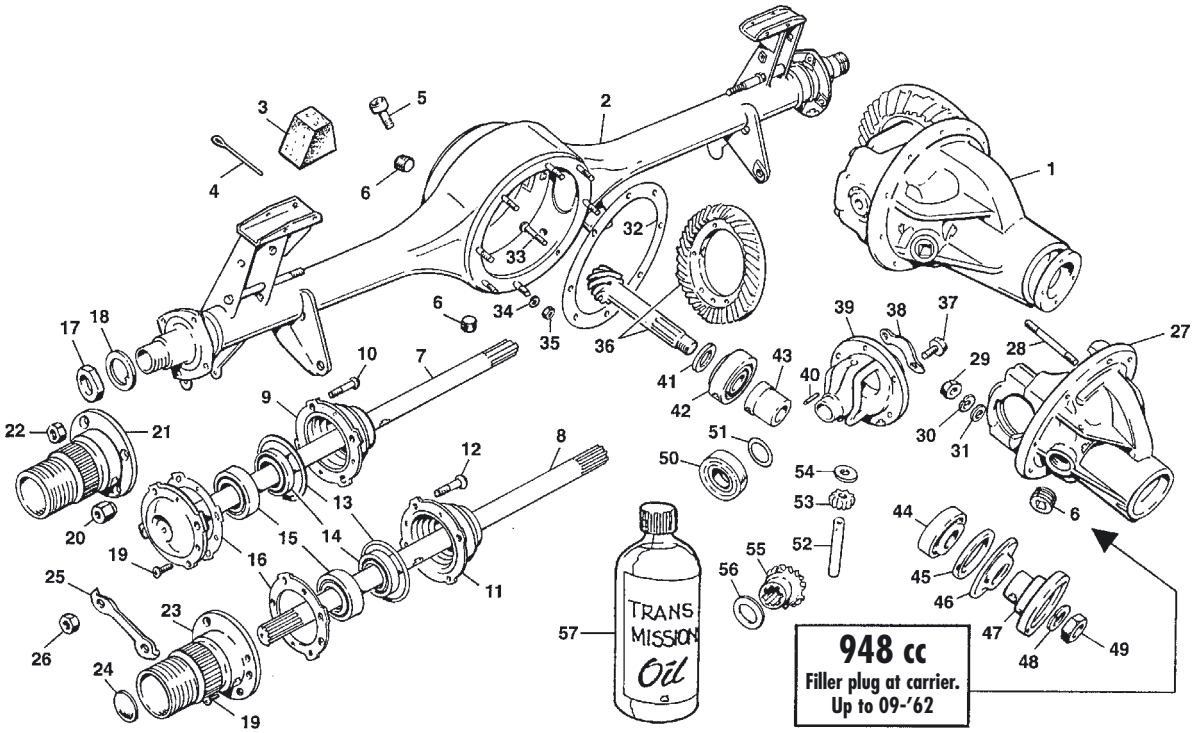

ILL N°	PART N°	QTY	DESCRIPTION	APPLICATION
1	**030.051**	**1**	Diff ass. 4.2 to 1	Standard ratio
			9 tooth pinion	38 tooth crown wheel
	030.100	**1**	Diff ass. 4.5 to 1	Alternative ratio
	030.040	**1**	Diff ass. 3.9 to 1	Alternative ratio
	030.085	**1**	Diff ass. 3.7 to 1	Alternative ratio
2	**030.101**	**1**	Diff casing, steel wheel	Secound hand only
	030.102	**1**	Diff casing, wire wheel	Secound hand only
3	**032.309**	**2**	Bump rubber	
4	**172.328**	**4**	Pin	
5	**023.017**	**1**	Breather	
6	**162.034**	**3**	Plug, drain or filling	948cc
	162.034	**2**	Plug, drain or filling	1098cc
7	**030.052**	**2**	Half shaft, steel wheel	
8	**030.046**	**2**	Half shaft, wire wheel	
9	**032.522**	**2**	Hub, steel wheel	
10	**167.112**	**8**	Stud, steel wheel	
11	**032.525**	**2**	Hub, wire wheel	
12	**167.129**	**8**	Stud, wire wheel	
13	**031.023**	**2**	'O' Ring	
14	**031.022**	**2**	Oil seal	
15	**031.024**	**2**	Bearing	
16	**031.021**	**2**	Gasket	
17	**031.025**	**2/1**	RH Side, RH thread nut	Very early had 2 x RH
	023.041	**1**	LH Side, LH thread nut	
18	**031.026**	**2**	Lock tab	
19	**162.058**	**2**	Screw, shaft to hub	
20	**161.411**	**8**	Wheel nut, steel wheels	
21	**042.202**	**1**	RH Conversion hub, 8 TPI	Steel whl -> Wire whl.
	042.203	**1**	LH Conversion hub, 8 TPI	Steel whl -> Wire whl.
22	**161.125**	**8**	Nut for conversion hub	Steel whl -> Wire whl.
23	**032.106**	**1**	RH Hub, wire wheel, 8 TPI	to be pressed on shaft
	032.107	**1**	LH Hub, wire wheel, 8 TPI	to be pressed on shaft
24	**032.049**	**2**	Blanking plug, 1.5/16"	
25	**174.023**	**4**	Lock tab	Wire wheel cars
26	**161.003**	**8**	Nut	Wire wheel cars
27	**032.691**	**1**	Diff. carrier	948cc
	030.086	**1**	Diff. carrier	1098cc
28	**167.019**	**4**	Stud	
29	**161.032**	**4**	Nut	
30	**164.021**	**4**	Washer, spring	
31	**163.130**	**4**	Washer, plain	
32	**016.259**	**1**	Gasket	
33	**167.018**	**8**	Stud	
34	**164.002**	**8**	Washer, spring	
35	**161.002**	**8**	Nut	
36	**032.687**	**1**	Crown whl.& pinion 3.727	948cc
	032.686	**1**	Crown whl.& pinion 3.9	948cc
	032.684	**1**	Crown whl.& pinion 4.222	948cc
	032.685	**1**	Crown whl.& pinion 4.555	948cc
	032.688	**1**	Crown whl.& pinion 4.875	948cc
	032.689	**1**	Crown whl.& pinion 5.375	948cc
	032.602	**1**	Crown whl.& pinion 3.727	1098cc
	032.320	**1**	Crown whl.& pinion 3.9	1098cc
	032.601	**1**	Crown whl.& pinion 4.222	1098cc
	032.690	**1**	Crown whl.& pinion 4.555	1098cc
37	**032.016**	**6**	Bolt, crown	
38	**174.068**	**3**	Lock tab plate	
39	**032.243**	**1**	Diff. cage	
40	**032.248**	**1**	Locating pin	
41	**032.326**	**A/R**	Shim 3.301mm	
	032.327	**A/R**	Shim 3.251mm	
	032.328	**A/R**	Shim 3.200mm	
	032.329	**A/R**	Shim 3.149mm	
	032.330	**A/R**	Shim 3.098mm	
	032.331	**A/R**	Shim 3.048mm	
	032.332	**A/R**	Shim 2.996mm	
	032.333	**A/R**	Shim 2.945mm	
42	**032.606**	**1**	Bearing, inner	948cc
	032.334	**1**	Bearing, inner	1098cc
43	**032.306**	**1**	Spacer	948cc
	032.307	**1**	Spacer	1098cc
44	**031.004**	**1**	Bearing, outer	948cc
	032.187	**1**	Bearing, outer	1098cc
45	**031.005**	**1**	Oil seal	
46	**031.006**	**1**	Dust cover	
47	**032.603**	**1**	Flange	
48	**164.010**	**1**	Washer	
49	**161.014**	**1**	Nut	
50	**032.321**	**2**	Diff. bearing	
51	**032.322**	**A/R**	Shim 0.050mm	
	032.323	**A/R**	Shim 0.067mm	
	032.324	**A/R**	Shim 0.101mm	
	032.325	**A/R**	Shim 0.254mm	
52	**032.245**	**1**	Pinion pin	
53	**032.246**	**2**	Pinion differential	
54	**032.692**	**2**	Thrust washer, cone	948cc
	032.247	**2**	Thrust washer, cone	1098cc
55	**032.244**	**2**	Wheel, differential	
56	**032.693**	**2**	Thrust washer, flat	948cc
	032.226	**2**	Thrust washer, flat	1098cc
57	**300.118**	**1**	1 L. Hypoid 85W/140	from Penrite Classic

© Van Gestel C&B 1997

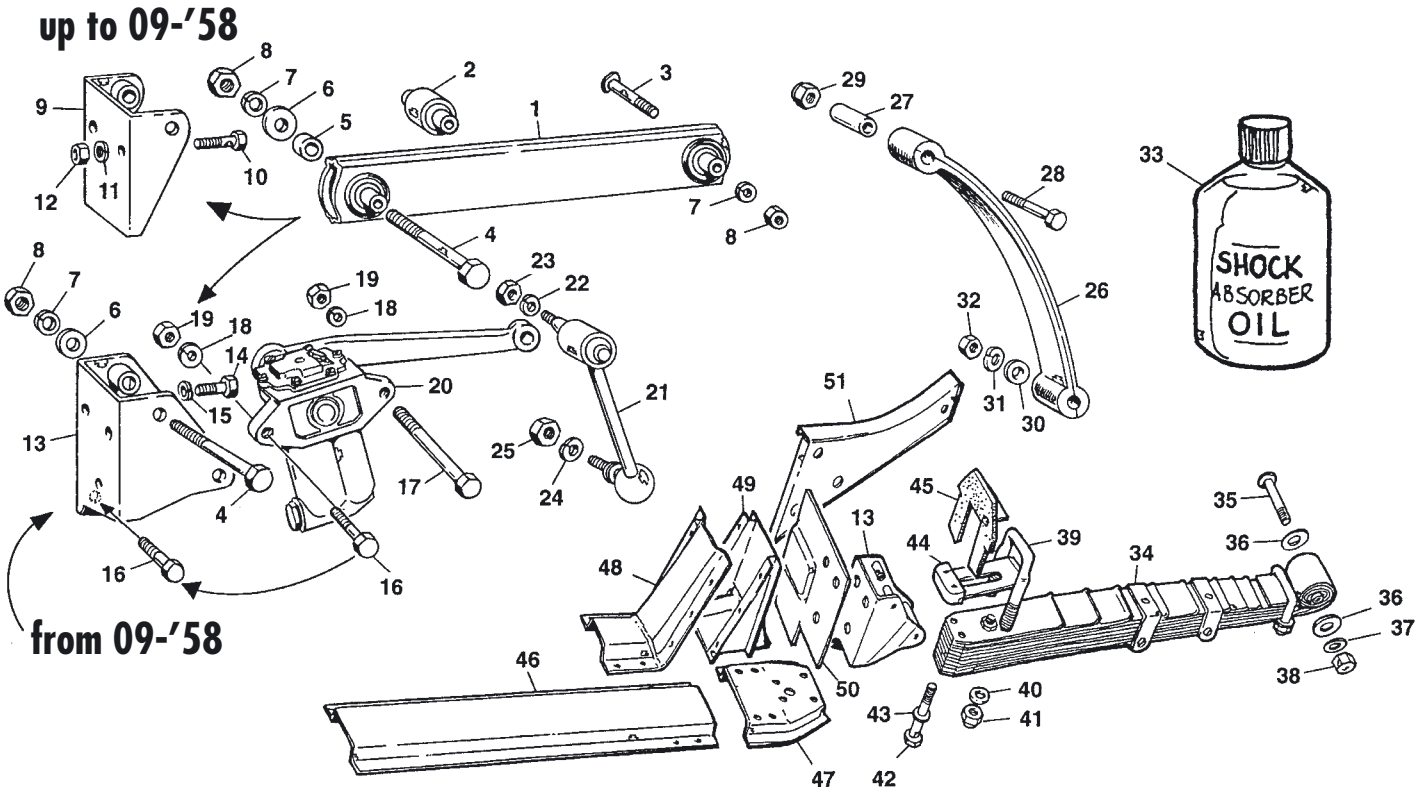

ILL N°	PART N°	QTY	DESCRIPTION	APPLICATION
1	**042.406**	**2**	Radius arm & bushes	Improved design
2	**032.237**	**4**	Bush for original arm	
3	**162.719**	**2**	Bolt, arm to axle	
4	**162.880**	**2**	Bolt, arm to bracket	
5	**041.568**	**4**	Spacer	
6	**163.130**	**2**	Washer, plain	
7	**164.021**	**4**	Washer, spring	
8	**161.032**	**4**	Nut	
9	**135.735**	**1**	RH Bracket	Sprite MK1 till 09/'58
	135.736	**1**	LH Bracket	Sprite MK1 till 09/'58
10	**162.042**	**4**	Bolt, bracket fixing	Sprite MK1 till 09/'58
11	**164.006**	**4**	Washer, spring	Sprite MK1 till 09/'58
12	**161.026**	**4**	Nut	Sprite MK1 till 09/'58
13	**133.969**	**1**	RH Bracket	from 09/'58
	133.970	**1**	LH Bracket	from 09/'58
14	**162.042**	**6**	Bolt, bracket fixing	
15	**164.006**	**6**	Washer, spring	
16	**162.066**	**4**	Bolt, short	Sprite MK1 till 09/'58
	162.066	**2**	Bolt, short	from 09/'58
17	**162.778**	**2**	Bolt, long	from 09/'58
18	**164.006**	**4**	Washer, spring	
19	**161.026**	**4**	Nut	
20	**042.172**	**1**	RH Shock absorber, new	
	042.173	**1**	LH Shock absorber, New	
21	**042.512**	**2**	Link, shack absorber	comes with nuts & washers
22	**164.006**	**2**	Washer, spring - upper	
23	**161.026**	**2**	Nut, upper	
24	**164.021**	**2**	Washer, spring - lower	
25	**161.032**	**2**	Nut, lower	
26	**041.042**	**2**	Check strap	
27	**041.554**	**2**	Distance piece, upper	
28	**162.478**	**2**	Bolt, upper	
29	**161.025**	**2**	Nut, nylonlock	
30	**163.014**	**2**	Washer, plain	
31	**164.006**	**2**	Washer, spring	
32	**161.026**	**2**	Nut	
33	**330.001**	**1**	1/2 L. Shock absorber oil for standard use	
	330.002	**1**	1/2 L. Shock absorber oil for competition use	
34	**042.161**	**2**	Rear spring, standard	
	042.723	**2**	Rear spring, lowered	
35	**162.719**	**2**	Bolt, rear spring to axle	
36	**041.569**	**4**	Washer	
37	**164.021**	**2**	Washer, spring	
38	**161.032**	**2**	Nut	
39	**041.495**	**2**	'U' Bolt	
40	**163.004**	**4**	Washer, plain	
41	**161.065**	**4**	Nut, self locking	
42	**162.676**	**4**	Bolt	
43	**164.006**	**4**	Washer, spring	
44	**041.397**	**2**	Block, tapping	
45	**041.483**	**2**	Packing plate	
46	**134.220**	**2**	Floor strenght	
47	**132.583**	**2**	Base plate	
48	**132.579**	**2**	Bulkhead reinforcement	
49	**132.577**	**2**	Box	Sprite MK1
	132.578	**2**	Box	Sprite MK2 & Midget MK1
50	**132.580**	**1**	RH 1/2 Plate	
	132.581	**1**	LH 1/2 Plate	
51	**132.584**	**1**	RH Bracket	
	132.585	**1**	LH Bracket	

© Van Gestel C&B 1997

Master brake pump & pedals

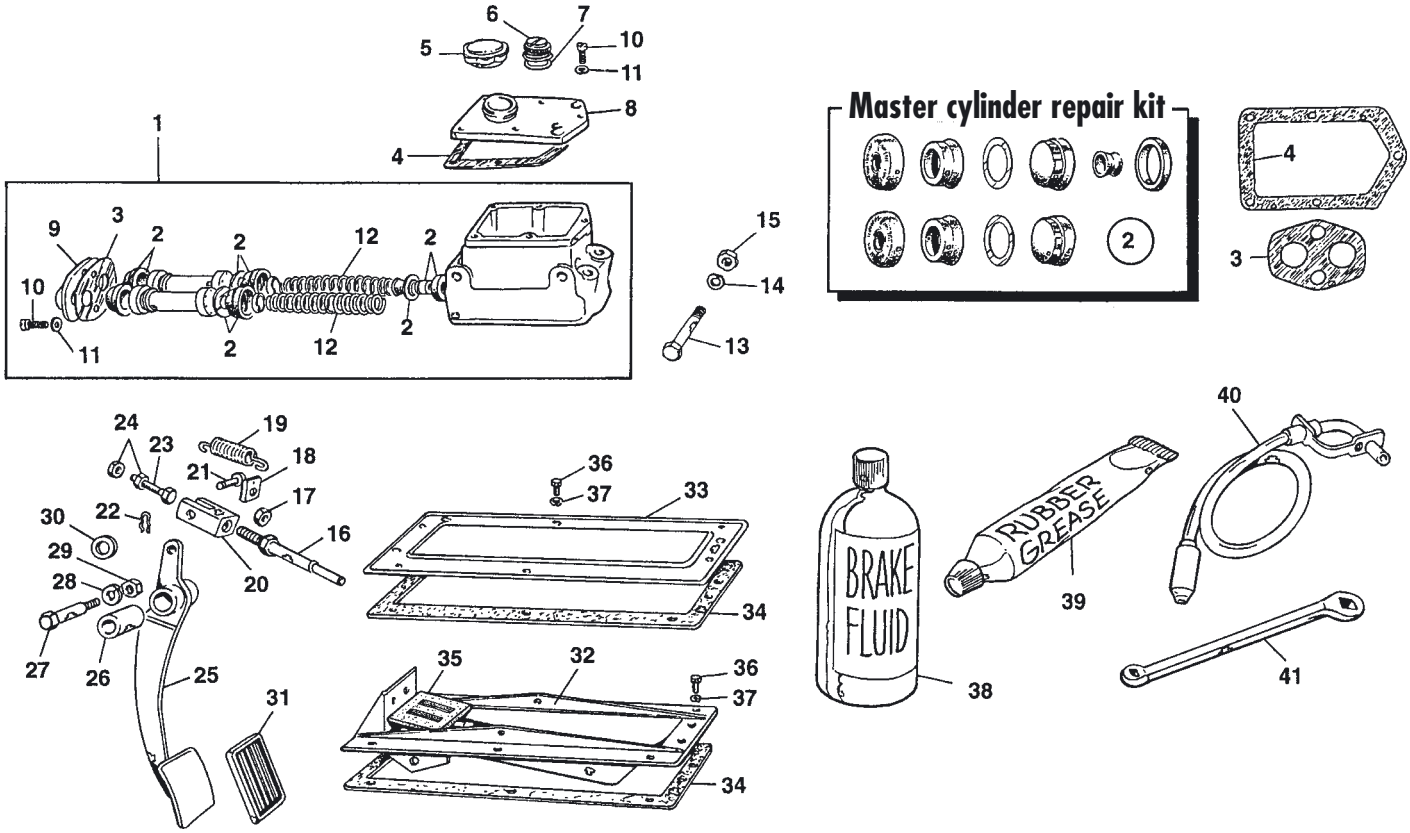

ILL N°	PART N°	QTY	DESCRIPTION	APPLICATION
1	**053.001**	**1**	Master brake pump 7/8"	Drum brake model
	053.041	**1**	Master brake pump 3/4"	Disc brake model
2	**052.456**	**1**	Repair kit, 7/8"	Drum brake model
	052.122	**1**	Repair kit, 3/4"	Disc brake model
3	**052.289**	**1**	Gasket, front plate	
4	**052.008**	**1**	Gasket, top cover	
5	**052.005**	**1**	Filler cap, plastic	
6	**052.295**	**1**	Filler cap, metal	
7	**052.006**	**1**	Seal, filler cap	
8	**052.007**	**1**	Cover plate, top	
9	**052.296**	**1**	Cover plate, front	
10	**162.571**	**7**	Screw, slotted head	
11	**164.015**	**7**	Washer, spring	
12	**052.298**	**2**	Spring	
13	**162.477**	**1**	Bolt, short	
	162.676	**1**	Bolt, long	
14	**164.006**	**2**	Washer, spring	
15	**161.026**	**2**	Nut	
16	**052.014**	**2**	Rod	
17	**161.008**	**2**	Adjusting nut	
18	**052.490**	**2**	Spring retaining plate	
19	**171.021**	**2**	Return spring	
20	**052.013**	**2**	Fork	
21	**172.426**	**2**	Clevis pin	
22	**171.038**	**2**	Retaining clip	
23	**162.065**	**2**	Adjuster screw	
24	**161.019**	**4**	Nut, locking	

ILL N°	PART N°	QTY	DESCRIPTION	APPLICATION
25	**027.277**	**1**	Brake pedal	
	027.278	**1**	Clutch pedal	
26	**027.279**	**2**	Pivot bush	
27	**165.002**	**1**	Pivot bolt	
28	**164.002**	**1**	Washer, spring	
29	**161.002**	**1**	Nut	
30	**163.001**	**1**	Distance washer, pedals	
31	**027.074**	**2**	Pedal rubber	
32	**135.765**	**1**	Pedal box	
33	**135.766**	**1**	Blanking plate	
34	**121.296**	**2**	Seal, foam gasket	
35	**121.277**	**1**	Seal, draught excluder	
36	**162.029**	**18**	Screw	
37	**164.012**	**18**	Washer, spring	
38	**053.039**	**1**	Brake fluid, DOT 4	1 Liter
	053.018	**1**	Brake fluid, Silicone	1 Liter
39	**052.117**	**1**	Rubber grease For use on rubber components, in or near brake fluid. USE NO OTHER GREASE !	
40	**053.176**	**1**	Easy bleed kit For brakes and clutch bleeding. The most efficient system. You can now bleed the system by yourselve.	
41	**052.339**	**1**	Brake adjuster tool	

© Van Gestel C&B 1997

Brake lines and handbrake

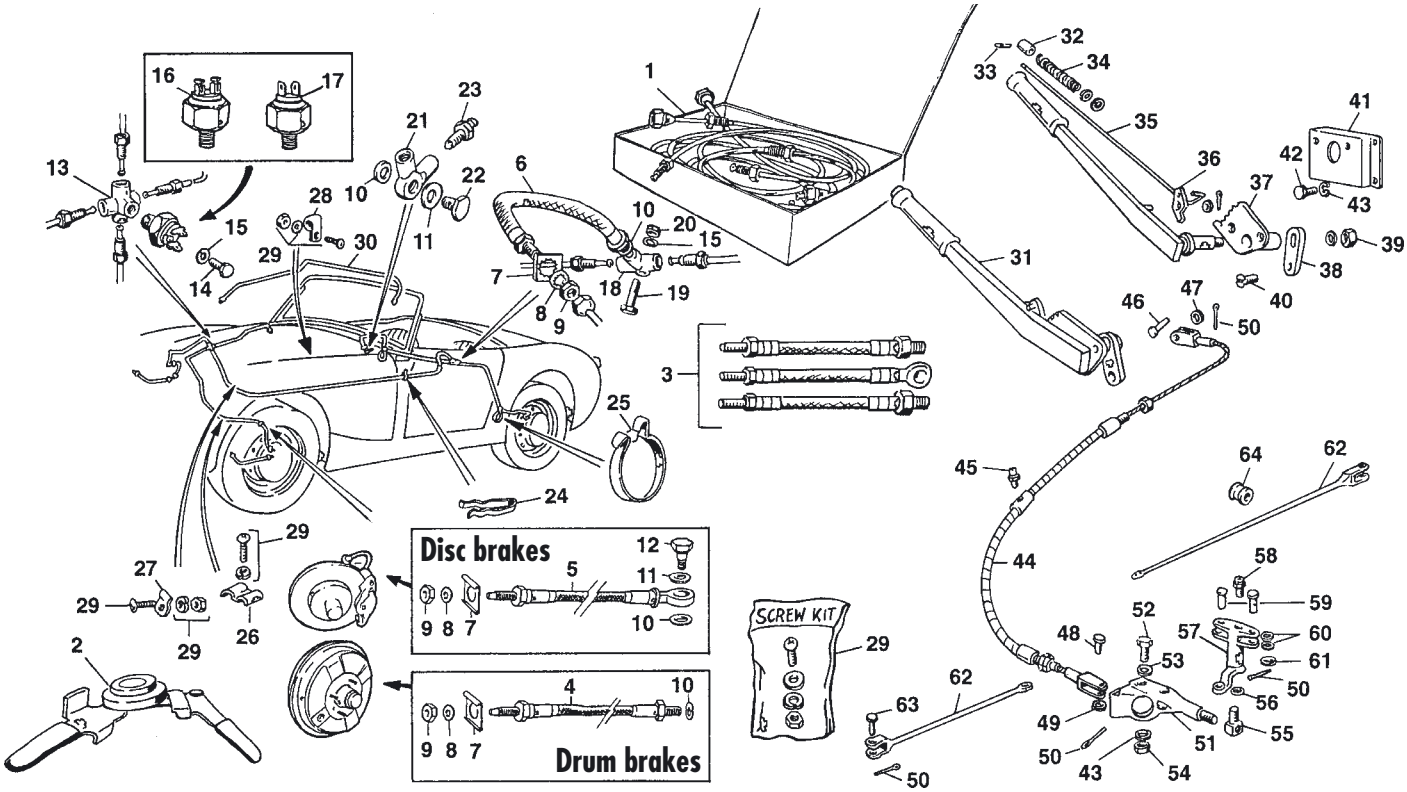

ILL N°	PART N°	QTY	DESCRIPTION	APPLICATION
1	**054.375**	1	LHD Brake pipe set, 948cc	to HAN6-20791
			04/'58 to 05/'62	GAN1-13554
	054.389	1	RHD Brake pipe set, 948cc	to HAN6-20791
			04/'58 to 05/'62	GAN1-13554
	054.110	1	LHD Brake pipe set, 948cc	from HAN6-20792
			05/'62 to 09/'62	GAN1-13554
	054.390	1	RHD Brake pipe set, 948cc	from HAN6-20792
			05/'62 to 09/'62	GAN1-13554
	054.391	1	LHD Brake pipe set, 1098cc	Disc brake model
			09/'62 on	1275cc Single system
	054.342	1	RHD Brake pipe set, 1098cc	Disc brake model
			09/'62 on	1275cc Single system
2	**200.737**	1	Bending tool	
3	**054.393**	1	Brake hose set, drum brake	High performance
			Stainless steel breaded	3 pieces
	054.394	1	Brake hose set, disc brake	High performance
			Stainless steel breaded	3 pieces
4	**054.184**	2	Front brake hose	Drum brake
5	**054.113**	2	Front brake hose	Disc brake
6	**054.064**	1	Rear brake hose	All
7	**172.074**	3	Locking plate	
8	**164.032**	3	Locking washer	
9	**161.026**	3	Nut	
10	**168.014**	6	Washer, copper	
11	**168.010**	4	Washer, copper	
12	**052.015**	2	Banjo bolt	Disc brake
13	**052.017**	1	5 Way union, front	
14	**162.065**	1	Screw	
15	**164.012**	2	Washer, spring	
16	**083.293**	1	Brake light switch	Screw connection
17	**084.004**	1	Brake light switch	Spade connection
18	**052.016**	1	3 Way union, on axle	
19	**162.522**	1	Mounting screw	
20	**161.019**	1	Nut	
21	**052.026**	2	2 Way union,	to 05/'62 053.005 wheel cyl.
22	**052.024**	2	Banjo bolt BSF,	to 05/'62 This is a single
23	**052.028**	2	Bleed screw	to 05/'62 piston whl.cylinder
24	**172.192**	4	Clip, brake pipe	
25	**162.617**	2	Clip, pipe to axle	
26	**172.263**	1	RHD only, clip clutch & brake pipe	
27	**172.616**	4	LHD only, brake pipe clip	
28	**172.042**	3	LHD only, brake & clutch pipes to bulkhead	
29	**162.507**	1	Screw kit, 3/16" UNF	40 pieces
30	**054.386**	1	LHD Clutch pipe	
	054.387	1	RHD Clutch pipe	
31	**054.332**	1	Handbrake lever assembly	Secound hand
32	**054.334**	1	Knob	
33	**172.607**	1	Pin	
34	**171.061**	1	Spring	
35	**054.335**	1	Rod, pawl	
36	**054.336**	1	Pawl	
37	**054.337**	1	Ratchet	
38	**054.399**	1	Link	
39	**161.026**	1	Nut	
40	**162.136**	2	Screw, countersunk	
41	**133.639**	1	Mounting bracket	
42	**162.045**	3	Screw	
43	**164.002**	5	Washer, spring	
44	**134.067**	1	Handbrake cable	
45	**043.020**	1	Grease nipple	
46	**172.611**	1	Clevis pin	
47	**163.001**	1	Washer, plain	
48	**172.612**	1	Clevis pin, cable/balance	
49	**163.010**	1	Washer, plain	
50	**172.294**	6	Split pin	
51	**054.114**	1	Bracket	
52	**162.005**	2	Screw	
53	**163.001**	2	Washer, plain	
54	**161.002**	2	Nut	
55	**054.116**	1	Carrier support	
56	**168.092**	1	Washer, felt	
57	**054.115**	1	Balance lever	
58	**041.161**	1	Grease nipple	
59	**172.193**	2	Clevis pin, balancer	
60	**168.092**	4	Washer, felt	
61	**163.007**	2	Washer, plain	
62	**134.700**	1	Pair adjustable rods	
63	**172.613**	2	Clevis pin, 1/4" dia	
64	**122.315**	1	Ferrule	

© Van Gestel C&B 1997

Front brakes

DRUM BRAKE

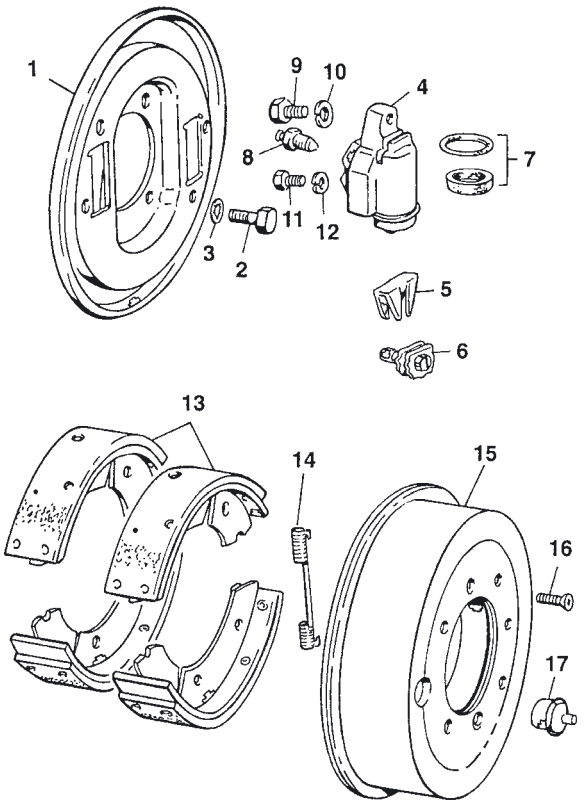

DISC BRAKE

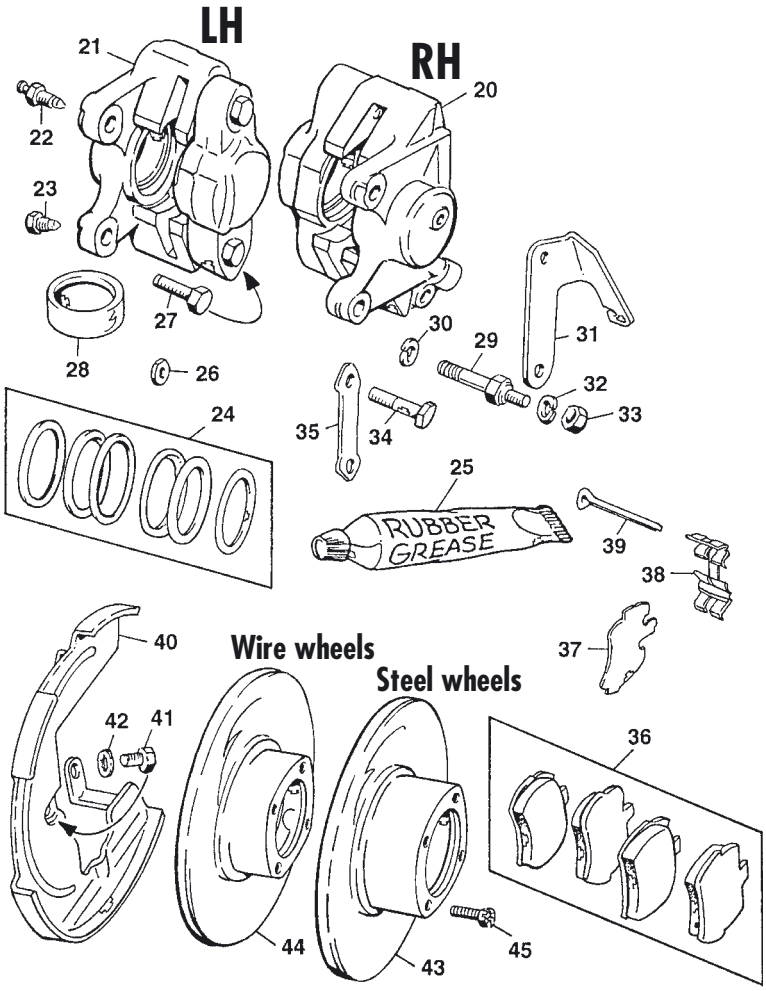

ILL N°	PART N°	QTY	DESCRIPTION	APPLICATION
Drum brake - front				
1	**050.159**	**1**	RH Back plate	
	050.160	**1**	LH Back plate	
2	**165.092**	**8**	Screw, back plate	
3	**164.012**	**8**	Washer, spring	
4	**053.006**	**2**	RH Wheel cylinder	
	053.007	**2**	LH Wheel cylinder	
5	**052.433**	**4**	Mask, adjuster	
6	**052.483**	**4**	Cam, adjuster	
7	**052.265**	**4**	Repair kit, wheel cylinder	
8	**052.028**	**4**	Bleed screw	
9	**162.045**	**4**	Screw, wheel cylinder 5/16"	
10	**164.002**	**4**	Washer, spring	
11	**162.044**	**4**	Screw, wheel cylinder 1/4"	
12	**164.012**	**4**	Washer, spring	
13	**053.100**	**1**	Set brake shoes, 4 pieces	
14	**052.426**	**4**	Spring, brake shoe	
15	**050.045**	**2**	Brake drum	
16	**162.590**	**4**	Screw, drum to hub	
17	**052.288**	**2**	Plug, brake drum	
Disc brake - front				
20	**050.048**	**1**	RH Brake calliper	Complete with pistons,
21	**050.049**	**1**	LH Brake calliper	seals and bleed screw.
22	**052.028**	**2**	Bleed screw	
23	**052.467**	**2**	Blanking plug	
24	**052.135**	**2**	Seal kit	

ILL N°	PART N°	QTY	DESCRIPTION	APPLICATION
25	**052.117**	**1**	Rubber Grease Special grease to be used with the seal kit.	DO NOT SEPARATE THE TWO HALVES FROM THE CALLIPER, if you did, use n° 26 & 27
26	**052.136**	**2**	Bridge seal	
27	**052.480**	**4**	Bridge bolt, very special	DO NOT USE OLD BOLTS
28	**053.047**	**4**	Piston, made from stainless steel	
29	**052.485**	**4**	Bolt, calliper mounting	Early disc brake cars
30	**164.021**	**4**	Washer, spring	Early disc brake cars
31	**052.486**	**1**	RH Hose bracket	Early disc brake cars
	052.487	**1**	LH Hose bracket	Early disc brake cars
32	**164.002**	**4**	Washer, spring	Early disc brake cars
33	**161.002**	**4**	Nut	Early disc brake cars
34	**162.398**	**4**	Bolt, calliper mounting	
35	**174.018**	**2**	Tab plate	
36	**053.046**	**1**	Brake pad set (4 pieces)	
37	**052.134**	**4**	Shim, anti squeal	
38	**052.133**	**2**	Plate, pad retaining	
39	**052.290**	**4**	Pin, pad retaining	
40	**050.046**	**1**	RH Dust plate	
	050.047	**1**	LH Dust plate	
41	**162.849**	**2**	Screw, plate retaining	
42	**164.002**	**2**	Washer, spring	
43	**050.039**	**2**	Brake disc, steel wheel	
44	**050.038**	**2**	Brake disc, wire wheel	
45	**162.397**	**8**	Bolt, brake disc	

© Van Gestel C&B 1997

Single acting piston wheel cylinder piston up to HAN6 20791 - GAN1 13554

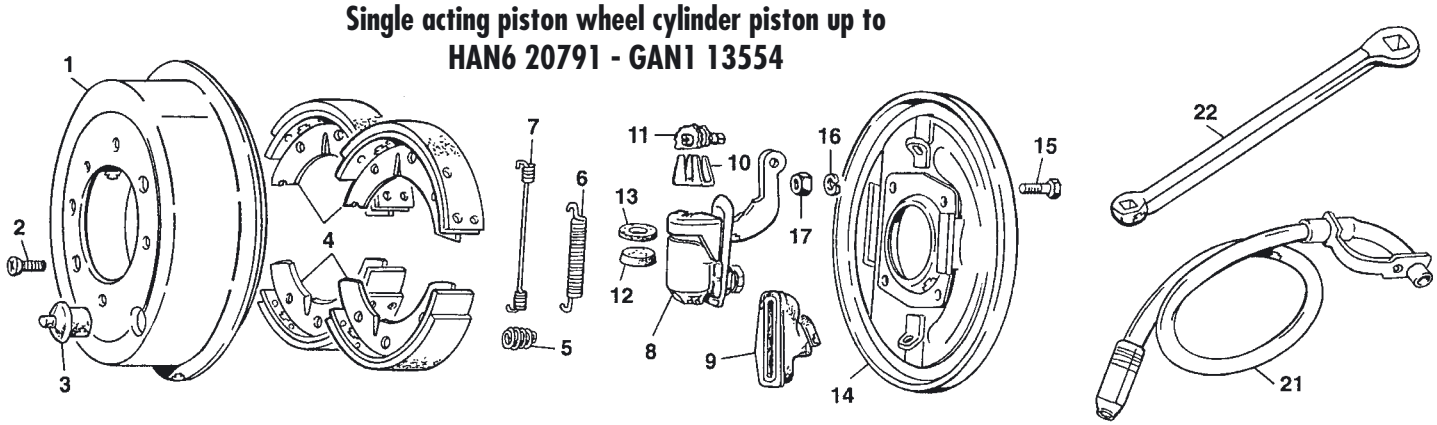

Double acting piston wheel cylinder system from HAN6 20792 - GAN1 13555

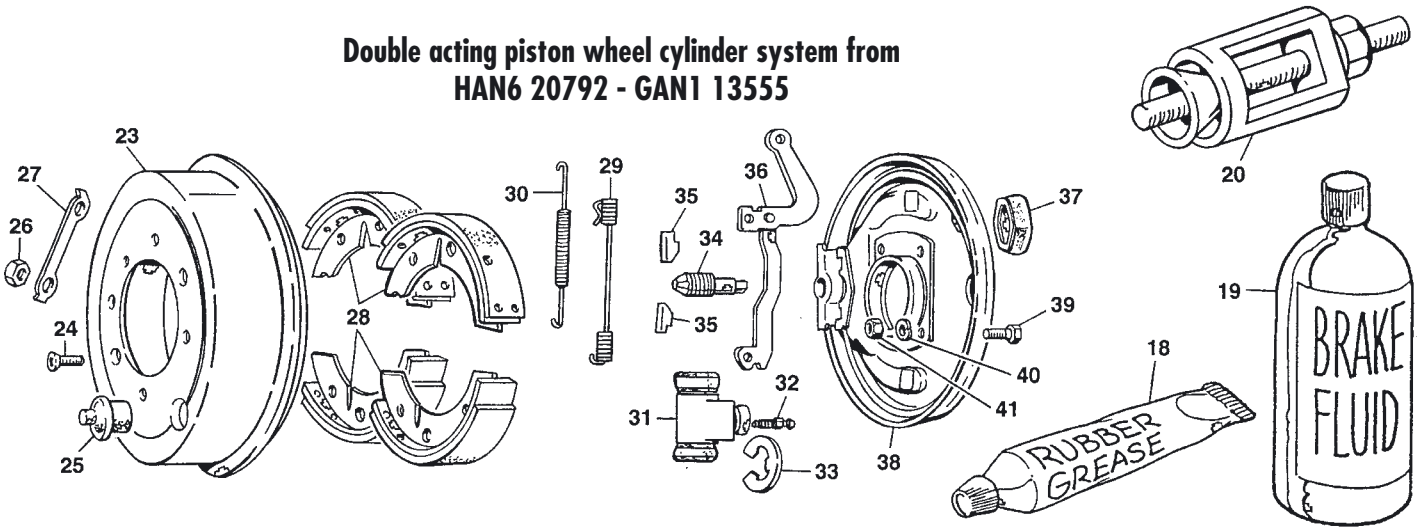

ILL N°	PART N°	QTY	DESCRIPTION	APPLICATION
	Single acting piston wheel cylinder piston up to HAN6 20791 - GAN1 13554			04/'58 to 05/'62
1	**050.045**	**2**	Rear brake drum	
2	**162.058**	**4**	Screw, securing	
3	**052.288**	**2**	Plug, adjusting access	
4	**053.101**	**1**	Brake shoe set , 2 sides	
5	**052.019**	**4**	Spring, shoe retaining	
6	**052.488**	**2**	Spring, abutment end	
7	**052.489**	**2**	Spring, wheel cyminder end	
8	**053.005**	**2**	Wheel cylinder assembly	
9	**052.023**	**2**	Dust cover	
10	**052.433**	**2**	Mask	
11	**052.484**	**2**	Adjusting cam	
12	**052.103**	**2**	Rubber cup, repair	
13	**052.114**	**2**	Rubber ring, repair	
14	**050.161**	**1**	RH Base plate	
	050.162	**1**	LH Base plate	
15	**162.005**	**8**	Screw	
16	**164.002**	**8**	Washer, spring	
17	**161.002**	**8**	Nut	
	Tools & Brake fluid			
18	**052.117**	**1**	Tube Ubber Grease Use this grease while assembling wheel cylinders or any other brake rubber components.	
19	**053.039**	**1**	1 L. Brake fluid DOT 4	
	053.018	**1**	1 L. Silicone brake fluid	
20	**200.707**	**1**	Tool, circlip fitting for dual piston wheel cylinder	
21	**053.176**	**1**	Easy Bleed Kit This clever one way system gives you the oppertiunity to bleed the system all by yourselves.	
22	**052.339**	**1**	Brake adjusting spanner	

ILL N°	PART N°	QTY	DESCRIPTION	APPLICATION
	Double acting piston wheel cylinder system from HAN6 20792 - GAN1 13555			05/'62 - on
23	**050.045**	**2**	Brake drum, rear brakes	
24	**162.058**	**4**	Securing screw	
25	**052.288**	**2**	Plug, adjusting access	
26	**161.003**	**8**	Nut, wire wheel cars only	
27	**174.023**	**4**	Lock tab, wire wheel cars only	
28	**050.054**	**1**	Brake shoe set, 2 sides	
29	**052.145**	**1**	RH Brake return spring	
	052.146	**1**	LH Brake return spring	
30	**052.147**	**2**	Brake return spring adjuster end	
31	**053.183**	**2**	Wheel cylinder, 22.2mm ID When also drum brakes are fitted at front.	
	053.048	**2**	Wheel cylinder, 19mm ID When disc brakes are fitted at front.	
32	**052.137**	**2**	Bleed screw	
33	**052.064**	**2**	Retaining clip, improved design use fitting tool ill.Nø 20	
34	**052.141**	**2**	Brake adjusting wedge	
35	**052.142**	**4**	Adjusting tappet	
36	**052.143**	**1**	RH Hand brake lever	
	052.144	**1**	LH Hand brake lever	
37	**052.140**	**2**	Dust cover, lever	
38	**050.050**	**1**	RH Back plate	
	050.051	**1**	LH Back plate	
39	**162.005**	**8**	Screw, back plate fixing	
40	**164.002**	**8**	Washer, spring	
41	**161.002**	**8**	Nut	

© Van Gestel C&B 1997

Heating & cold air system

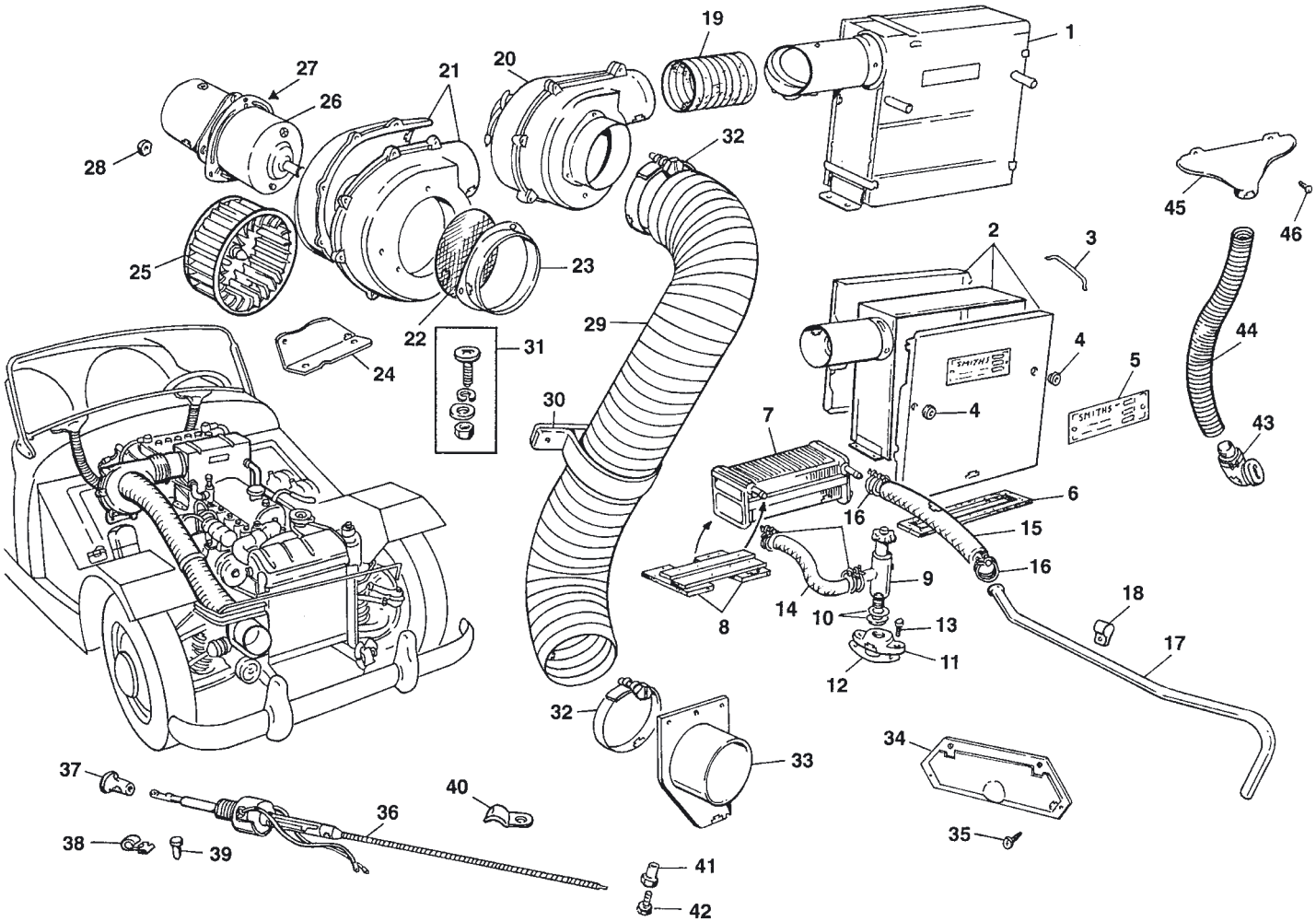

ILL N°	PART N°	QTY	DESCRIPTION	APPLICATION
1	**063.134**	**1**	Heater assembly	
2	**063.315**	**1**	Heater box, 3 piece	
3	**063.007**	**6**	Clip, heater box	
4	**063.005**	**2**	Grommet	
5	**085.025**	**1**	Plate, 'Smiths'	
	085.008	**1**	Sticker, 'Smiths'	
6	**121.028**	**1**	Seal, foam strip	
7	**063.004**	**1**	Heater matrix, radiator	
8	**063.101**	**1**	Felt pad kit, matrix protector into box	
9	**063.043**	**1**	Heater tap	
10	**168.023**	**A/R**	Washer, fibre	
11	**063.044**	**1**	Plate, adaptor	
12	**016.177**	**1**	Gasket	
13	**162.077**	**2**	Screw	
	164.012	**2**	Washer, spring	
14	**062.057**	**1**	Hose, tap to heater	
15	**063.027**	**1**	Hose, heater to pipe	
16	**172.026**	**5**	Clamp, wire type	
17	**063.313**	**1**	Pipe, brass	
	063.314	**1**	Pipe, stainless steel	
18	**172.146**	**2**	Clip, pipe	
19	**063.308**	**1**	Connection hose, paper/allu	
	063.193	**1**	Connection hose, plastic	
20	**063.132**	**1**	Blower assembly & bracket	
21	**063.161**	**1**	Casing, backelite	
22	**133.335**	**1**	Mesh	
23	**063.282**	**1**	Flange, air hose	

ILL N°	PART N°	QTY	DESCRIPTION	APPLICATION
24	**063.310**	**1**	Bracket, blower	
25	**063.107**	**1**	Runner, plastic improved type	
26	**063.305**	**1**	Motor less bracket	
27	**063.306**	**1**	Backet	
28	**133.998**	**3**	Grommet	
29	**063.307**	**1**	Main air hose, paper/allu	
	063.108	**1**	Main air hose, plastic	
30	**101.043**	**1**	Bracket, hose to body	
31	**162.507**	**1**	Screw set, 10 pieces of : screws, spring washers, plain washers & nuts	
32	**172.024**	**2**	Clamp, air hose	
33	**135.014**	**1**	Front mounting, air hose A.H. Sprite MK1 only	
34	**133.090**	**2**	Door, fresh air	
35	**162.061**	**8**	Screw, tapping	
36	**063.312**	**1**	Control cable,	Sprite MK1
	063.048	**1**	Control cable,	Sprite MK2 & Midget
37	**063.049**	**1**	Knob,	
38	**172.058**	**1**	Clip	
39	**172.059**	**1**	Pin	
40	**172.023**	**1**	Clamp	
41	**172.056**	**1**	Trunnion	
42	**162.135**	**1**	Screw	
43	**063.034**	**2**	Desmister elbow	
44	**063.016**	**2**	Air hose, paper/allu/paper	
45	**135.680**	**2**	Nozzle, desmister	
46	**162.467**	**4**	Screw, nozzle	

© Van Gestel C&B 1997

Wheels & original tools

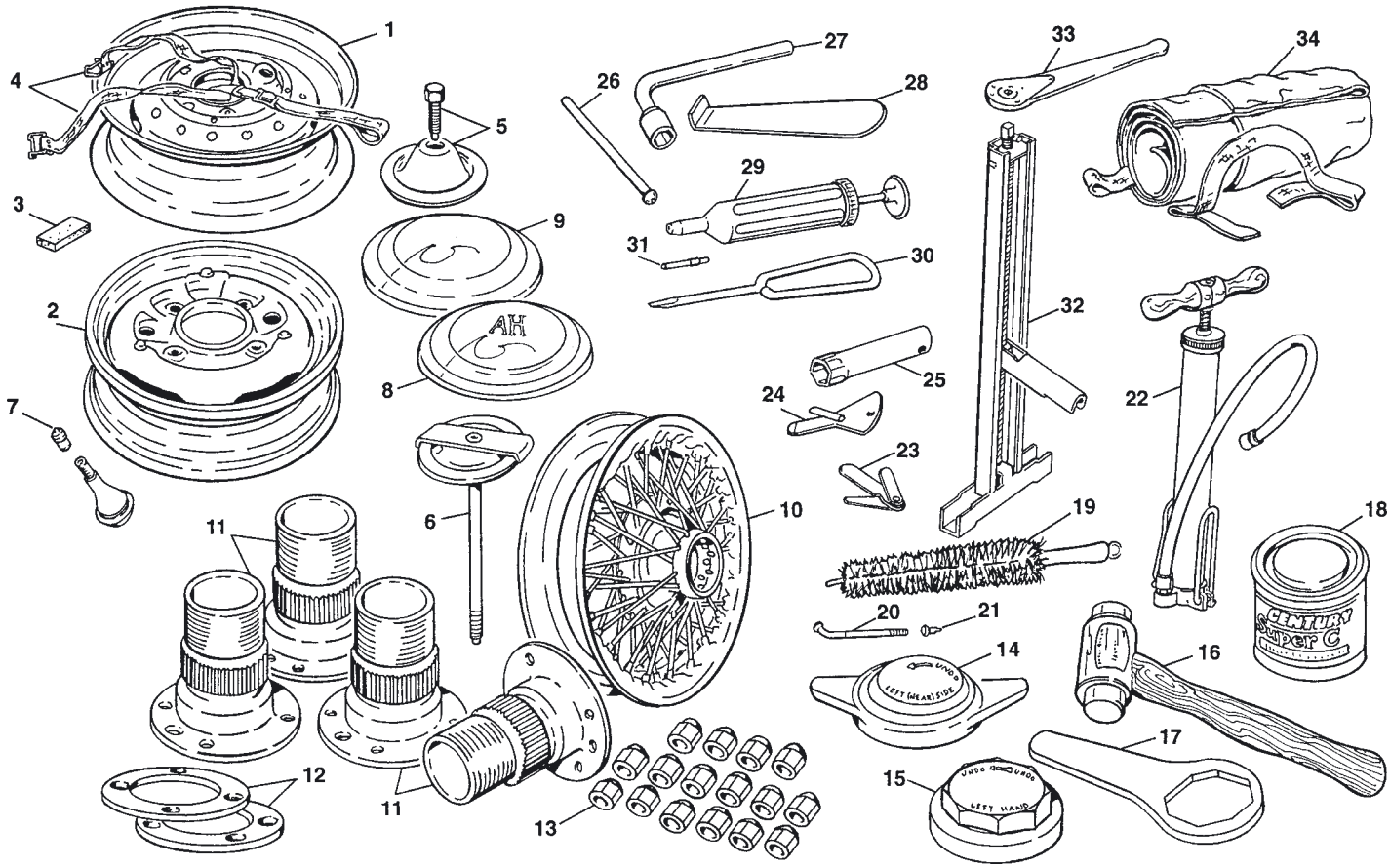

ILL N°	PART N°	QTY	DESCRIPTION	APPLICATION
1	**046.092**	**5**	Vented Steel Wheel	up to 12/'62
2	**046.041**	**5**	Plain Steel Wheel	from 12/'62
3	**133.022**	**3**	Felt pad, under spare wheel	
4	**159.068**	**1**	Strap kit, spare wheel	Sprite MK1
5	**133.479**	**1**	Clamp for steel wheel	
6	**133.478**	**1**	Clamp for wire wheel	
7	**161.476**	**5**	Valve cap, nickle plated	
8	**141.290**	**4**	Hub cap, 'A H'	Austin Healey
9	**141.289**	**4**	Hub cap, plain	MG
10	**046.019**	**5**	Chrome Wire Wheel with polished stainless steel spokes	
	046.018	**5**	Wire Wheel, silver painted	
11	**042.202**	**2**	RH Wire wheel conversion hub	use 8 TPI spinners
	042.203	**2**	LH Wire wheel conversion hub	use 8 TPI spinners
12	**042.204**	**2**	Spacer use with front conversion hubs. (Drum brake model only)	
13	**161.125**	**16**	Special nut for conversion hub	
14	**042.071**	**2**	RH Spinner, 8 TPI	disc brake cars & conversion
	042.072	**2**	LH Spinner, 8 TPI	disc brake cars & conversion
	042.069	**2**	RH Spinner, 12 TPI	drum brake cars
	042.070	**2**	LH Spinner, 12 TPI	drum brake cars
	042.075	**2**	RH Spinner, MG creasted 8 TPI	disc brake cars & conversion
	042.076	**2**	LH Spinner, MG creasted 8 TPI	disc brake cars & conversion
	042.073	**2**	RH Spinner, MG creasted 12 TPI	drum brake cars
	042.074	**2**	LH Spinner, MG creasted 12 TPI	drum brake cars
15	**042.079**	**2**	RH Spinner, continental, 8 TPI	disc brake cars & conversion
	042.080	**2**	LH Spinner, continental, 8 TPI	disc brake cars & conversion
	042.077	**2**	RH Spinner, continental, 12 TPI	drum brake cars
	042.078	**2**	LH Spinner, continental, 12 TPI	drum brake cars
	042.346	**2**	RH Spinner, continental, 8 TPI, MG	disc brake cars & conversion
	042.347	**2**	LH Spinner, continental, 8 TPI, MG	disc brake cars & conversion
	042.344	**2**	RH Spinner, continental, 12 TPI, MG	drum brake cars
	042.345	**2**	LH Spinner, continental, 12 TPI, MG	drum brake cars

ILL N°	PART N°	QTY	DESCRIPTION	APPLICATION
16	**042.097**	**1**	Hammer, copper/hide	1.15 Kgr
17	**133.141**	**1**	Spanner for continental spinners	
18	**186.034**	**1**	Copper Grease, high temp.grease	
19	**185.050**	**1**	Wire wheel cleaning brush	
20	**169.025**	**A/R**	Short spoke, bare metal	
	169.026	**A/R**	Long spoke, bare metal	
	169.027	**A/R**	Short spoke, stainless steel	
	169.028	**A/R**	Long spoke, stainless steel	
21	**169.001**	**A/R**	Nipple, bare metal	
	169.002	**A/R**	Nipple, stainless steel	
22	**132.526**	**1**	Tyre pump	
23	**200.711**	**1**	10 Blade imperial gauge	
24	**200.652**	**1**	'Lucas' Tool for distributor: screwdriver and contact point feeler (adjusting).	
25	**200.662**	**1**	Spark plug spanner	
26	**200.655**	**1**	Tommy bar	
27	**200.621**	**1**	Wheel nut spanner	
28	**133.140**	**1**	Hub cap remover	
29	**200.671**	**1**	Grease gun, Tecalemit	
30	**200.640**	**1**	Screwdriver	
31	**200.630**	**1**	Tyre valve spanner	
32	**132.304**	**1**	Jack	
33	**200.620**	**1**	Jack ratchet handle	
34	**153.056**	**1**	Large bag for jack & tyre pump	
	150.299	**1**	Tool roll, for small tools	

INFO: TPI stands for thread per inch, quantity thread per 25.4mm
12 TPI is only used on original wire wheel bubs for early cars fitted with drum brake system front & rear.
Replacement hubs for above cars are now 8 TPI
8 TPI is used on our conversion hubs aswell as on late cars titted with disc brake system at front.

© Van Gestel C&B 1997

Starter motor & dynamo

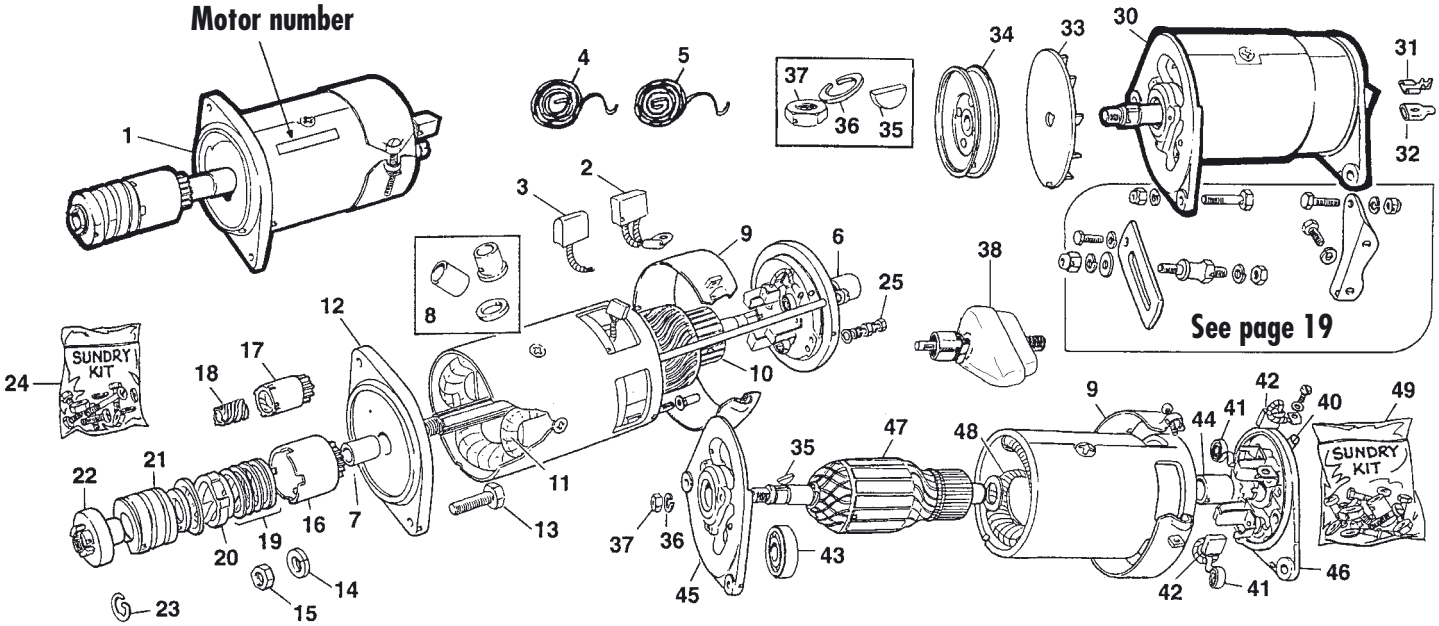

ILL N°	PART N°	QTY	DESCRIPTION	APPLICATION
	STARTER MOTOR			
1	**082.002**	**1**	Starter motor, LUCAS withouth inspection band	Replacement type number 25149 etc..
	082.036	**1**	Starter motor, LUCAS tion band and a threaded pinion retaining nut	number 25022 early type with inspec-
	082.018	**1**	Starter motor, LUCAS with inspection band and a circlip to retain the pinion drive.	number 25079 or 25083
2	**081.035**	**1**	Brush set, original types	25022 - 25079 - 25083
3	**081.222**	**1**	Brush set, replacement type	25149 etc..
4	**081.116**	**1**	Spring set, check type of inner loop before ordering	
5	**081.223**	**1**	Spring set, check type of inner loop before ordering	
6	**081.120**	**1**	Bush, rear end	25022
	081.179	**1**	Bush, rear end	25079 - 25083
7	**081.029**	**1**	Bush, driving end	25055
	081.224	**1**	Bush, driving end	25079 - 25083
8	**081.226**	**1**	Bush kit, late type	25149 etc..
9	**081.113**	**1**	Band, dust cover	
10	**082.019**	**1**	Armature with threaded pinion end.	25022
	082.037	**1**	Armature with clip pinion end	25079 - 25083
	081.568	**1**	Armature, late type	25149 etc..
11	**082.020**	**1**	Coil field	25022 - 25079 - 25083
	081.569	**1**	Coil field	25149 etc..
12	**081.115**	**1**	Bracket, front drive	25022
	081.567	**1**	Bracket, front drive	25079 - 25083
	081.460	**1**	Bracket, front drive	25149 etc..
13	**162.048**	**2**	Bolt, starter mounting	
14	**164.006**	**2**	Washer, spring	
15	**161.026**	**2**	Nut	
16	**081.030**	**1**	Pinion & barrel	25022
17	**081.225**	**1**	Pinion & barrel	25079 - 25083 - 25149
18	**081.227**	**1**	Sleeve	25079 - 25083 - 25149
19	**081.031**	**1**	Spring	all
20	**081.032**	**1**	Sleeve	25022
21	**081.033**	**1**	Main spring	all
22	**081.034**	**1**	Nut	25022
23	**081.580**	**1**	Circlip	all exept 25022
24	**081.117**	**1**	Sundries kit	
25	**161.569**	**2**	Brass nut, terminal	

ILL N°	PART N°	QTY	DESCRIPTION	APPLICATION
	DYNAMO			
30	**082.011**	**1**	Dynamo and tacho drive with threaded end plate	22721 type
	082.015	**1**	Dynamo and tacho drive with threaded end plate	22744 type
	082.001	**1**	Dynamo for electrical tachometer	22700 - 22742 etc..
31	**083.185**	**1**	Lucar terminal 9.5mm	to fit late type
	083.181	**1**	Lucar terminal 6.3mm	to fit late type
32	**083.186**	**1**	Isolator for 083.185	
	083.182	**1**	Isolator for 083.181	
33	**081.024**	**1**	Fan	
34	**081.219**	**1**	Pulley	
35	**172.014**	**1**	Key, pulley drive	
36	**164.021**	**1**	Washer, spring	
37	**161.298**	**1**	Nut	
38	**083.549**	**1**	Tacho drive reduction box	
40	**081.108**	**1**	Oiler, tacho drive endplate	
41	**081.110**	**2**	Spring, early	
	081.023	**2**	Spring	22721 - 22744 - etc
42	**081.109**	**1**	Brush set, early	
	081.022	**1**	Brush set	22721 - 22744 - etc
43	**081.105**	**1**	Bearing, front end	all
44	**081.106**	**1**	Bush, rear end	all
45	**081.104**	**1**	Bracket, front end	22721 - 22744
	081.221	**1**	Bracket, front end	22700
	081.573	**1**	Bracket, front end	22742
46	**081.107**	**1**	Bracket with threaded end for reduction box attaching	22721 - 22744
	081.485	**1**	Bracket, rear end	22700
	081.572	**1**	Bracket, rear end	22742
47	**082.051**	**1**	Amature and tacho drive	22721 - 22744
	082.035	**1**	Amature NO tacho drive	22700
48	**082.017**	**1**	Coil field set	
49	**081.111**	**1**	Sundry parts set	

INFO: A new Dynamo must be polarizated before fitting. Read carefully the instructions before fitting.

A Bolt the dynamo to the engine. DO NOT connect the cables to the 'D' and 'F' terminals.
B See what battery terminal is earth, + or -
C Temporarily connect a length of wire to the battery: negative terminal for a positive earth system or positive terminal for a negative earth system.
D Push the other end of the wire several times against terminal 'F'. This serves to re-polarize the dynamo.
E Remove the temporary wire connection and connect the original car wiring cables to 'D' and 'F' terminals.

© Van Gestel C&B 1997

Battery & wiring

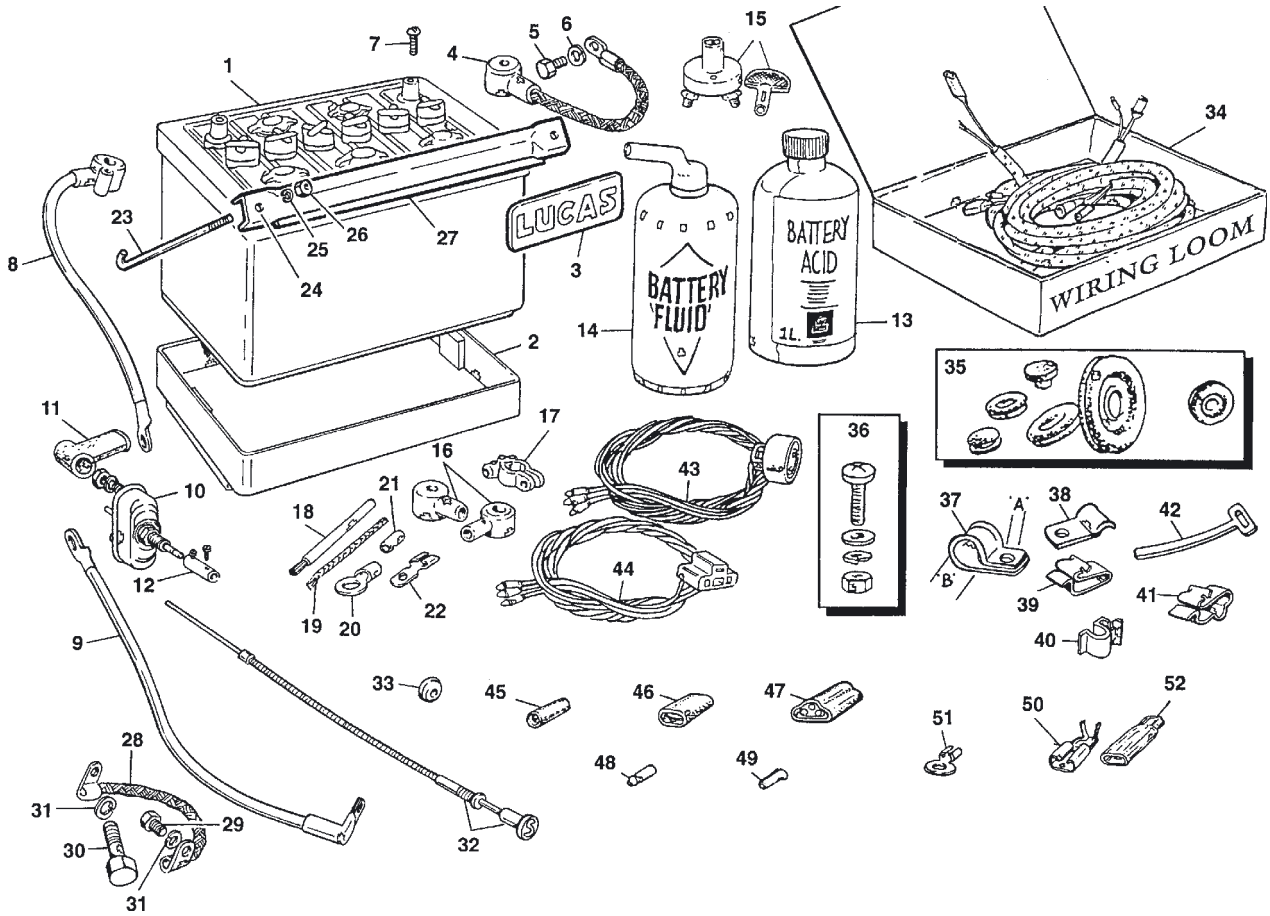

ILL N°	PART N°	QTY	DESCRIPTION	APPLICATION
1	**082....**	**1**	Battery, black rubber casing dry charged	
	082.075	**1**	Battery, modern replacement	dry charged
2	**132.727**	**1**	Battery tray	
3	**085.260**	**1**	'LUCAS' Battery sticker	red on gold, very nice
4	**080.137**	**1**	Cable, battery + to earth	
5	**162.005**	**1**	Screw, earth	
6	**164.002**	**1**	Washer, spring	
7	**162.580**	**2**	Terminal screw	
8	**080.211**	**1**	Cable, battery - to switch	
9	**080.213**	**1**	Cable, switch to starter	
10	**084.002**	**1**	Switch, starter motor	
11	**084.003**	**2**	Boot, cable	
12	**084.001**	**1**	Connector & 2 screws	
13	**082.009**	**4**	1 Liter Acid	
14	**200.703**	**1**	Safety! Battery filler bottle	
15	**083.174**	**1**	Battery cut-off switch	
16	**086.343**	**1**	Pair die cast terminals	
17	**083.178**	**1**	Terminal, -	
	083.179	**1**	Terminal, +	
18	**080.133**	**1**	5 Meter starter cable	plain copper wires
	080.299	**A/R**	1 meter starter cable	plain copper wires
19	**080.134**	**1**	1 Meter earth cable copper	wire bundles, tinned
20	**083.651**	**A/R**	Soldered flag terminal	heavy duty
21	**083.653**	**A/R**	Heatshrink tubing 9.5mmI.D x 32mm long	
22	**083.652**	**A/R**	Straight terminal	
23	**135.170**	**2**	Battery bolt, streaght	'58 -'63 155mm
	081.354	**2**	Battery bolt, bended	'63 - on 135
24	**135.171**	**1**	Battery clamping bar	'58 - '63
	081.353	**1**	Battery clamping bar	'63 - on
25	**164.012**	**2**	Washer, spring	
26	**161.019**	**2**	Nut	
27	**081.039**	**1**	Packing strip	
28	**080.009**	**1**	Earth cable, engine	
29	**162.690**	**1**	Screw, floor UNF	
30	**162.964**	**1**	Bolt, slave cylinder UNC	
31	**164.006**	**2**	Washer, spring	
32	**101.562**	**1**	LHD & RHD Starter cable	Sprite MK1
	101.820	**1**	LHD Starter cable	Sprite MK2 & Mid.MK1
	101.562	**1**	RHD Starter cable	Sprite MK2 & Mid.MK1

ILL N°	PART N°	QTY	DESCRIPTION	APPLICATION
33	**122.005**	**1**	Grommet, bulkhead	
34	**080.037**	**1**	Wiring loom 948cc 58-61 Cloth covered harness	Sprite MK1
	080.038	**1**	Wiring loom 948cc 61-62 Cloth covered harness	Sprite MK2 & Mid.MK1
	080.039	**1**	Wiring loom 1098cc 62-64	Sprite MK2 & Mid.MK1
35	**121.002**	**1**	Firewall grommet kit: Included are all grommets for the fire wall: blancking grommets, cable pass grommets, grommet to pass the main wiring harness & wiper motor rod.	
36	**162.507**	**2**	3/16" UNF Screw kit: 10 x screws, washers & nuts	
37	**172.140**	**A/R**	Clip, A= 3/16" B= 1/4"	
	172.141	**A/R**	Clip, A= 3/16" B= 3/8"	
	172.148	**A/R**	Clip, A= 3/16" B= 5/8"	
	172.041	**A/R**	Clip, A= 1/4" B= 1/4"	
	172.142	**A/R**	Clip, A= 1/4" B= 3/8"	
	172.149	**A/R**	Clip, A= 1/4" B= 5/8"	
38	**172.627**	**A/R**	Clip, harness to sill	
39	**172.680**	**1**	Clip, bonnet platform	Sprite MK2 & Mid.MK1
	172.622	**3**	Clip, bonnet platform	Sprite MK2 & Mid.MK1
40	**172.077**	**4**	Clip, horn harness	Sprite MK1
41	**172.373**	**2**	Clip, at bonnet flange	Sprite MK1
42	**172.623**	**2**	Clip, at steering column	
43	**084.093**	**2**	Wiring & bulb socket	Early style
44	**084.052**	**2**	Wiring & bulb socket	3 spade type
45	**083.041**	**A/R**	Cable connector - single	
46	**083.042**	**A/R**	Cable connector - double	
47	**083.043**	**A/R**	Cable connector - triple	
48	**083.180**	**A/R**	Cable terminal, solder type	
49	**083.044**	**A/R**	Cable terminal, sleeve	
50	**083.181**	**A/R**	Female terminal, 17 amp.	6.3mm
	083.185	**A/R**	Female terminal, 35 amp.	9.5mm
51	**083.996**	**A/R**	Eyelet terminal, 4.7mm	
	083.997	**A/R**	Eyelet terminal, 6.3mm	
	083.998	**A/R**	Eyelet terminal, 7.9mm	
52	**083.182**	**A/R**	Insulator for 083.181	
	083.186	**A/R**	Insulator for 083.185	

© Van Gestel C&B 1997

Windscreen wiper & washer installation

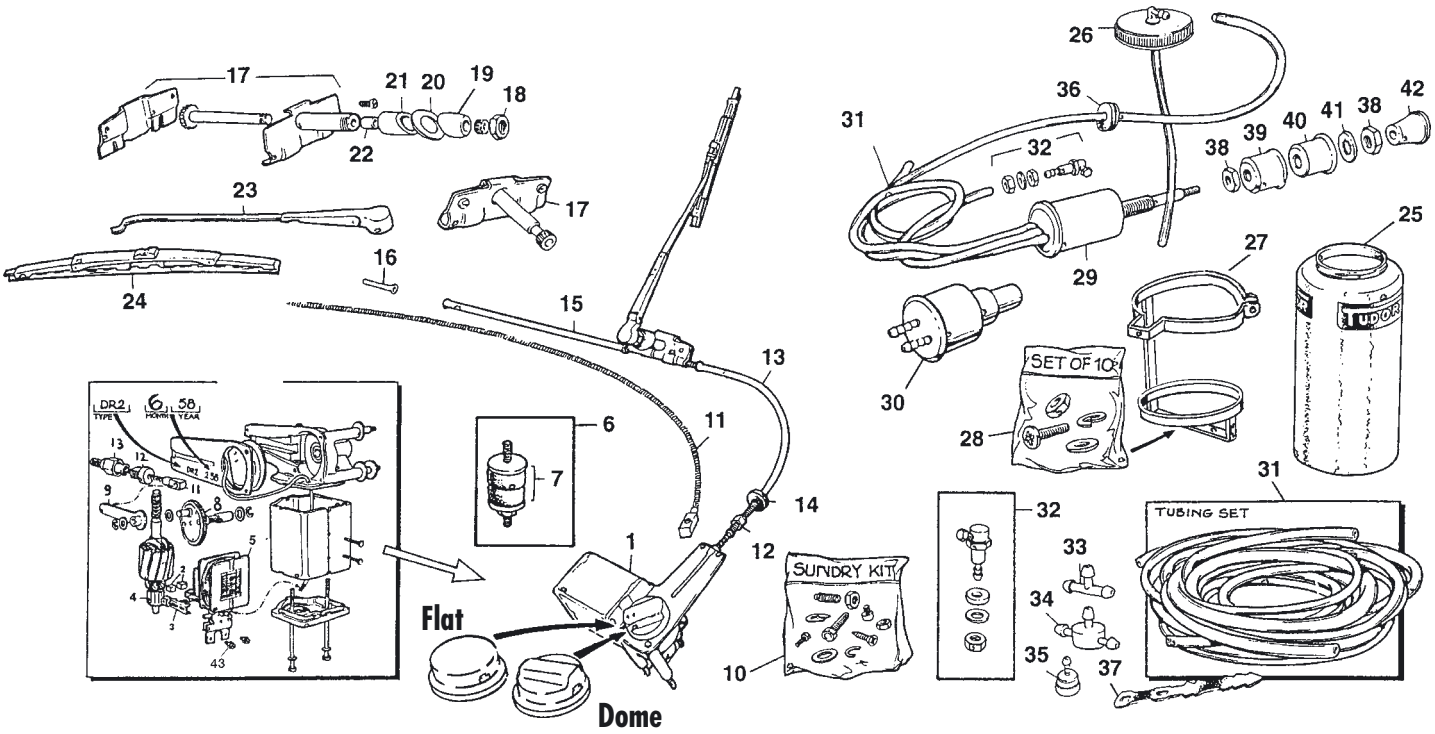

ILL N°	PART N°	QTY	DESCRIPTION	APPLICATION
1	**082.059**	**1**	Wiper motor less gear Screw-on wire connection Domed cap	Sprite MK1 to AN5 5477 04/'58 - 10/'58
	082.032	**1**	Wiper motor less gear Screw-on wire connection Flat cap	Sprite MK1 10/'58 on
	083.028	**1**	Wiper motor less gear Push-on wire connection	Sprite MK2 and Midget MK1
2	**083.197**	**1**	Brush set	
3	**083.636**	**1**	Brush gear	
4	**082.039**	**1**	Armature	
5	**083.637**	**1**	Coil field	
6	**133.344**	**3**	Mounting kit, includes buffer, stud, washers & nut	
7	**122.048**	**3**	Buffer only	
8	**086.355**	**1**	Drive gear, NOT supplied with wiper motor	Sprite MK1
	086.354	**1**	Drive gear, NOT supplied with wiper motor	Sprite MK2 & Mid.MK1
9	**083.643**	**1**	Connecting link	
10	**083.640**	**1**	Sundries kit	
11	**083.024**	**1**	Rack	
12	**083.825**	**1**	Male ferrule	
13	**054.360**	**1**	Outer casing	Motor to wheelbox
14	**122.199**	**1**	Grommet, bulkhead	
15	**054.361**	**1**	Outer casing	Wheelbox to wheelbox
16	**133.136**	**1**	Outer casing	End piece
17	**083.023**	**2**	Wheelbox assembly	
18	**083.021**	**2**	Chrome nut	
19	**141.031**	**2**	Chrome bezel	

ILL N°	PART N°	QTY	DESCRIPTION	APPLICATION
20	**083.134**	**2**	Rubber seal	
21	**083.642**	**2**	Spacer bush	
22	**122.201**	**2**	Dust seal, rubber bush	
23	**083.030**	**2**	LHD Wiper arm	
	083.031	**2**	RHD Wiper arm	
24	**083.032**	**2**	Wiper blade	
25	**086.371**	**1**	Washer bottle, large Early Sprites	use with cap 086.372 and bracket 135.209
	083.050	**1**	'Tudor' Bottle, small Alternative for 086.371	use with cap 083.314 and bracket 083.061
26	**086.372**	**1**	Cap for 086.371 only !	
	083.314	**1**	Cap and tube for 083.050	
27	**135.209**	**1**	Bracket for 086.371 bottle	
	083.061	**1**	Bracket for 083.050 bottle	
28	**162.507**	**1**	Screw kit (40 pieces)	
29	**083.645**	**1**	Washer pump, original type	less knob and fittings
30	**083.046**	**1**	Washer pump, alternative	with knob and fittings
31	**083.055**	**1**	Tubing set	
32	**083.047**	**2**	Jet assembly	
33	**083.056**	**1**	'T' Piece	
34	**083.755**	**1**	'T' Piece with non return valve	
35	**083.054**	**1**	Valve, non return	
36	**122.300**	**1**	Grommet	
37	**083.058**	**A/R**	Strap, rubber	
38	**161.350**	**2**	Flat nut	
39	**083.648**	**1**	Spacer, behind dashboard	
40	**083.647**	**1**	Chrome bezel, cup shape	
41	**164.032**	**1**	Washer, spring	
42	**083.646**	**1**	Knob ' 'Push'	
43	**165.123**	**2**	Screw, terminal	

© Van Gestel C&B 1997

Switches, fuse boxes, control boxes & warning lamps

Sprite MK I 1958-'61

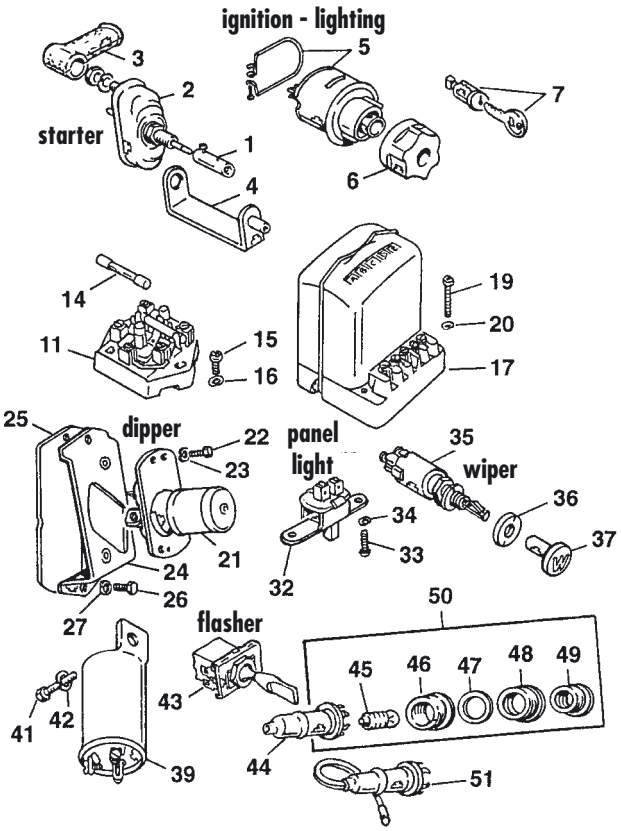

Sprite MK II - Midget MK I 1961-'64

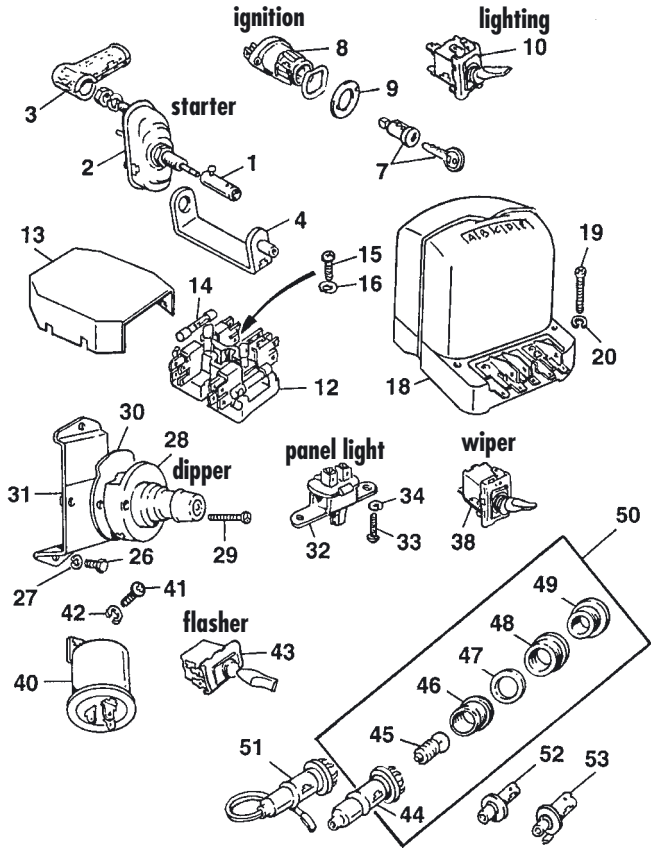

ILL N°	PART N°	QTY	DESCRIPTION
1	**084.001**	**1**	Connector
2	**084.002**	**1**	Starter switch
3	**084.003**	**2**	Boot, cable
4	**133.364**	**1**	Bracket, switch & cable
5	**083.437**	**1**	Ignition & light switch
6	**083.603**	**1**	Knob
7	**083.035**	**1**	Barrel and two keys
8	**083.036**	**1**	Ignition switch
9	**083.335**	**1**	Nut, ignition switch
10	**083.084**	**1**	Lighting switch
11	**084.006**	**1**	Fuse box, screw connectors
12	**083.117**	**1**	Fuse box, spade connectors
13	**083.118**	**1**	Cover for 084.117 only
14	**084.005**	**1**	Fuse set, 3 pieces, 35amp.
15	**162.139**	**2**	Screw
16	**164.015**	**2**	Washer, spring
17	**084.007**	**1**	Control box, screw connectors
18	**082.023**	**1**	Control box, spade connector
19	**162.164**	**2**	Screw
20	**164.015**	**2**	Washer, spring
21	**084.010**	**1**	Dip switch
22	**162.972**	**2**	Screw
23	**164.015**	**2**	Washer, spring
24	**135.769**	**1**	Bracket
25	**135.770**	**1**	Insulating pad
26	**162.409**	**2**	Screw, bracket
27	**164.012**	**2**	Washer, spring
28	**083.077**	**1**	Dip switch
29	**162.791**	**2**	Screw
30	**135.771**	**1**	Insulating pad
31	**135.671**	**1**	Bracket
32	**086.356**	**1**	Panel light switch
33	**165.097**	**2**	Screw
34	**164.023**	**2**	Washer, spring
35	**083.034**	**1**	Wiper switch
36	**161.352**	**1**	Chrome nut
37	**083.657**	**1**	Knob,'W'
38	**083.418**	**1**	Wiper switch
39	**084.011**	**1**	Flasher box, screw type
40	**083.079**	**1**	Flasher box, spade type
41	**162.409**	**1**	Screw
42	**164.012**	**1**	Washer, spring
43	**083.578**	**1**	Indicator switch
44	**084.132**	**5**	Bulp holder, less earth wire
45	**084.123**	**A/R**	Bulp
46	**084.654**	**1**	Shade, bulp holder
47		**1**	Washer
48	**084.655**	**1**	Body, warning light
49	**084.656**	**1**	Bezel & green lens
	084.657	**1**	Bezel & red lens
50	**084.658**	**1**	Green warning lamp assembly direction indicator
	084.659	**1**	Red warning lamp assembly for optionals
51	**083.115**	**1**	Bulp holder with earth for ignition warning or any optional warning lamps
52	**084.134**	**1**	Bulp holder, main beam warning (comes with wiring loom)
53	**084.133**	**1**	Bulp holder, ignition warning (comes with wiring loom)

© Van Gestel C&B 1997

Horns & instruments

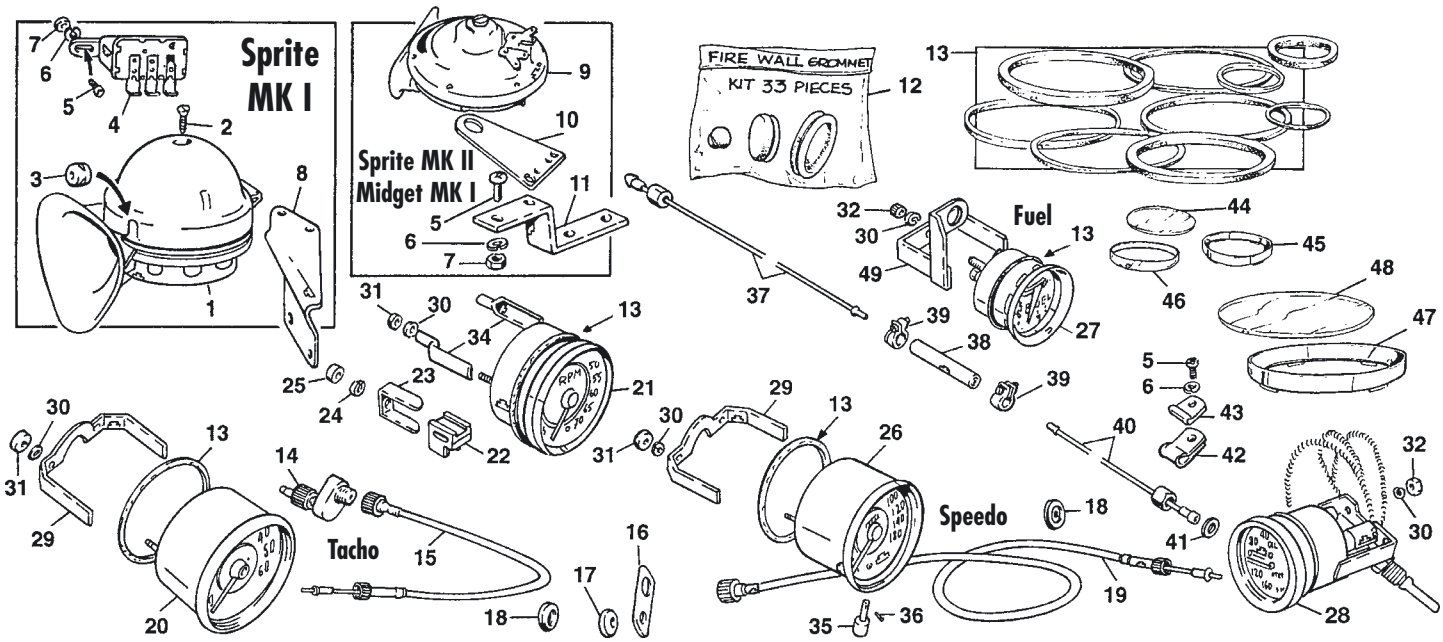

ILL N°	PART N°	QTY	DESCRIPTION	APPLICATION
1	**084.047**	1	Horn, low note	Sprite MK1
	084.048	1	Horn, high note	Sprite MK1
2	**162.383**	2	Screw, cover to horn	
3	**122.203**	2	Grommet, horn	
4	**083.992**	1	Relay, horn	
5	**162.047**	2	Screw	
6	**164.015**	2	Washer, spring	
7	**161.024**	2	Nut	
8	**135.737**	1	RH Bracket	
	135.738	1	LH Bracket	
9	**086.193**	1	Horn, low note	Sprite MK2 & Midget MK1
	086.194	1	Horn, high note	Sprite MK2 & Midget MK1
10	**135.739**	2	Plate, horn to bracket	
11	**135.668**	1	RH Bracket	
	135.669	1	LH Bracket	
12	**121.002**	1	Fire wall grommet set	
13	**083.439**	1	Ring & Seal kit,	3 seals each instrument
			Cut to lenght.	2 x 4" and 2 x 2"
14	**083.549**	1	Reduction box	
15	**086.195**	1	LHD Tacho cable, 92 cm	
	086.072	1	RHD Tacho cable, 63 cm	
16	**135.772**	1	Bracket, tacho cable	
17	**122.058**	1	Grommet, cable/bracket	
18	**122.004**	2	Grommet, cable/bulkhead	
19	**083.510**	1	LHD Speedo cable, 138 cm	
	083.007	1	RHD Speedo cable, 168 cm	
20	**083.556**	1	Tacho, Smith mechanical	948cc Sprite MK1 RN2351/02
	086.363	1	Tacho, Smith mechanical	948cc Sprite MK2 RN2313/00
	083.127	1	Tacho, Jaeger mechanical	948cc Midget MK1 RN2312/01
21	**083.491**	1	Tacho, Smith electro POS	1098cc RVI2401/00
22	**083.102**	1	Core	
23	**083.103**	1	Clip	
24	**164.024**	1	Washer, spring	
25	**161.058**	1	Nut	
26	**086.357**	1	Speedo KPH, Smith 920	948cc Sprite MK1 SN6155/11
	086.358	1	Speedo MPH, Smith 1472	948cc Sprite MK1 SN6155/10
	086.359	1	Speedo KPH, Smith 920	948cc Sprite MK2 SN6126/01
	086.360	1	Speedo MPH, Smith 1472	948cc Sprite MK2 SN6126/00
	086.361	1	Speedo KPH, Jaeger 920	948cc Midget MK1 SN6125/03
	086.328	1	Speedo MPH, Jeager 1472	948cc Midget MK1 SN6125/02
	083.558	1	Speedo KPH, Smith 920	1098cc SN6135/01
	086.362	1	Speedo MPH, Smith 1472	1098cc SN6135/00

ILL N°	PART N°	QTY	DESCRIPTION	APPLICATION
27	**083.569**	1	Fuel, Smith	948cc Sprite MK1 FG2530/31
	086.365	1	Fuel, Smith	948cc Sprite MK2 FG2530/64
	083.092	1	Fuel, Jaeger	948cc Midget MK1 FG2530/63
	083.131	1	Fuel, Smith	1098cc FG2530/70
28	**083.094**	1	Dual Gauge °C, NEW	suit all types GD1301
	086.364	1	Dual Gauge °F, Smith	948cc Sprite MK1 GD1502/01
	086.366	1	Dual Gauge °C, Smith	948cc Sprite MK2 GD1502/08
	086.367	1	Dual Gauge °F, Smith	948cc Sprite MK2 GD1502/06
	086.369	1	Dual Gauge °C, Jaeger	948cc Midget MK1 GD1501/11
	086.368	1	Dual Gauge °F, Jaeger	948cc Midget MK1 GD1501/10
	083.515	1	Dual Gauge °C, Smith	1098cc GD1501/13
	083.573	1	Dual Gauge °F, Smith	1098cc GD1501/12
29	**172.066**	2	Bracket, large	
30	**164.015**	7	Washer, spring	
31	**161.057**	4	Knurled round nut, large	
32	**161.356**	3	Knurled round nut, small	
34	**172.065**	2	Clamp, late type	
35	**083.750**	1	Knop, trip master	
36	**162.586**	1	Screw, for trip knob	
37	**083.783**	1	Oil pipe, block to flex	
38	**083.805**	1	Flexible oil hose	
39	**172.049**	2	Clip, hose	
40	**083.782**	1	LHD Pipe hose to gauge	
	086.315	1	RHD Pipe hose to gauge	
41	**168.052**	1	Leather washer, seal	
42	**172.434**	4	Clip for capillary tube	
43	**172.020**	1	Clip, oil pipe	
44	**083.454**	2	Glass, small 2" dia.	
45	**083.434**	2	Chrome rim, small 2" dia.	
46	**083.749**	2	Window strip, blue 2" dia.	
47	**083.456**	2	Chrome rim, large 4" dia.	
48	**083.455**	2	Glass, large 4" dia.	
49	**133.742**	1	LH Bracket & socket holder	
	083.096	1	RH Bracket & socket holder	

Instruments Repair Services: Send your old instruments and we will take care for a perfect restoration. All instruments for repair get a job number and warranty number. You will get your own instrument back after repair, this is best for keeping your car as original as possible. In some ocasions we might help you selling instruments on an outright basis. Please call for more information.

© Van Gestel C&B 1997

Headlamps

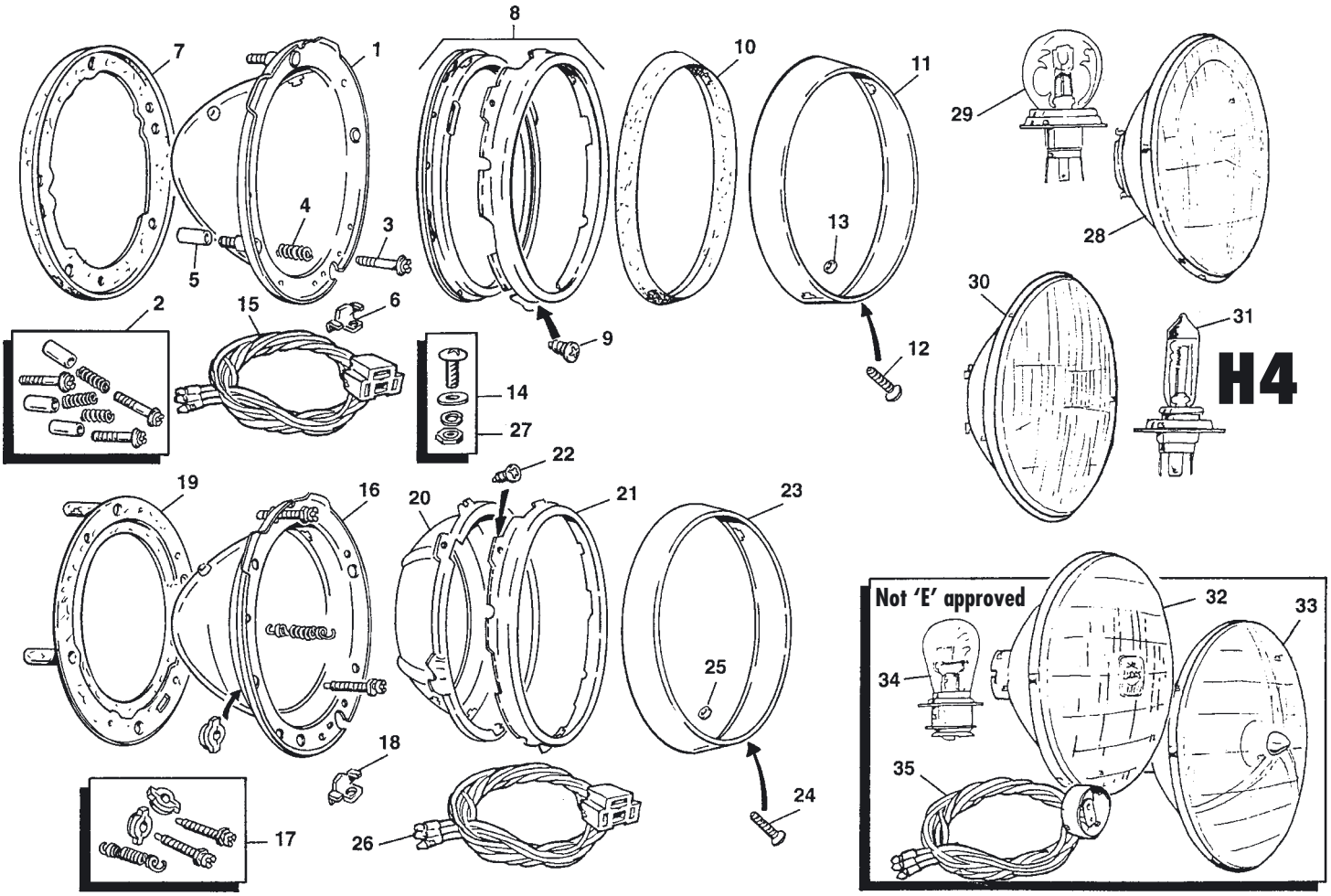

ILL N°	PART N°	QTY	DESCRIPTION
	3 SCREW ADJUSTING LAMP FITTINGS		
	1958 -> approx Nov.1961		
1	**084.017**	**2**	Headlamp bowl, less fittings
2	**084.157**	**2**	Set of 3 dust caps, springs and adjusting screws
3	**162.341**	**6**	Screw, adjusting
4	**171.018**	**6**	Spring
5	**122.062**	**6**	Dust cap
6	**172.160**	**2**	Clip, rim retaining screw
7	**084.015**	**2**	Seal, headlamp bowl to body
8	**084.014**	**2**	Pair retaining rims
9	**162.109**	**6**	Screw for retaining rims
10	**084.177**	**2**	Dust seal, rubber
11	**084.013**	**2**	Chrome headlamp rim
12	**162.340**	**2**	Chrome screw
13	**163.062**	**2**	Seal, screw retaining
14	**162.507**	**1**	Set, headlamp bowls fixing
15	**084.052**	**2**	Wiring & Lamp socket to suit 'E' approved lamp units
	2 SCREW ADJUSTING LAMP FITTINGS		
	from approx Nov.1961 - on		
16	**133.050**	**2**	Headlamp bowl, less fittings
17	**084.051**	**2**	Kit, lamp adjusting
18	**172.160**	**2**	Retaining clip, headlamp rim
19	**084.081**	**2**	Seal, headlamp bowl to body
20	**084.053**	**2**	Inner retaining rim
21	**084.087**	**2**	Outer retaining rim, chrome plated
22	**162.109**	**6**	Screw, retaining rims
23	**084.154**	**2**	Headlamp rim, chrome plated
24	**162.340**	**2**	Screw, rim retaining
25	**163.062**	**2**	Seal, screw retaining
26	**084.052**	**2**	Wiring & lamp socket, to suit 'E' approved lamp units
27	**162.507**	**1**	Set, headlamp bowls fixing
28	**084.082**	**2**	Lamp unit, made by Lucas 'E' approved, LHD cars
	084.102	**2**	Lamp unit, RHD cars only !
29	**084.054**	**2**	Headlamp bulb
	084.109	**2**	Headlamp bulb, yellow
30	**084.103**	**2**	Headlamp unit H4, made by Lucas 'E' approved, LHD cars
	084.107	**2**	Headlamp unit H4 ,'E' approved RHD cars only !
31	**084.110**	**2**	H4 Bulb
32	**084.016**	**2**	Original style Lucas lamp unit NOT 'E' approved.
33	**084.205**	**2**	Tripot lamp unit, NOT 'E' approved
34	**084.094**	**2**	LHD (RH dip) headlamp bulb
	084.115	**2**	RHD (LH dip) headlamp bulb
35	**084.093**	**2**	Wiring & bulb holder for bulbs using bajonette fitting (ill Nø34)

© Van Gestel C&B 1997

Side lamps, front flasher lamps & spot lamps

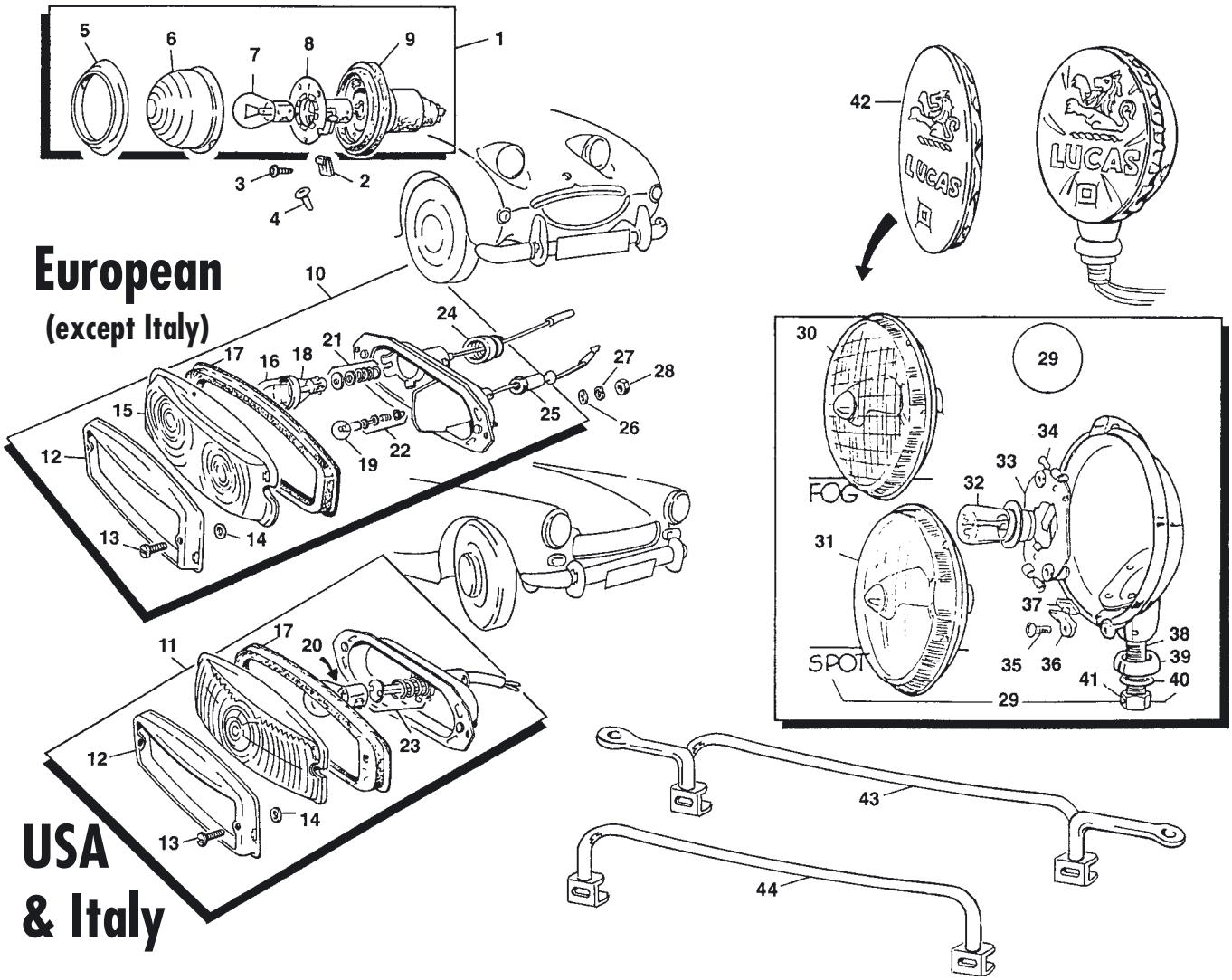

ILL N°	PART N°	QTY	DESCRIPTION	APPLICATION
1	**084.174**	**2**	Side & Flasher lamp Clear	Sprite MK1
2	**161.315**	**6**	Spire nut, clip	
3	**162.588**	**6**	Screw	
4	**083.044**	**4**	Push-inn connector	
5	**084.080**	**2**	Rim, chrome	
6	**084.091**	**2**	Lens, clear glass	
7	**084.063**	**2**	Bulb 21/5 W	
8	**084.176**	**2**	Socket	
9	**084.092**	**2**	Body rubber	
10	**084.234**	**1**	RH Side & Flasher lamp Amber and clear lens	Sprite MK2 - Midget MK1
	084.235	**1**	LH Side & Flasher lamp Amber and clear lens	Sprite MK2 - Midget MK1
11	**084.629**	**2**	Side & Flasher lamp all clear lens	Sprite MK2 - Midget MK1
12	**084.240**	**2**	Rim, chrome	
13	**162.378**	**4**	Screw, rim retaining	
14	**163.062**	**4**	Seal, screw retaining	
15	**084.237**	**1**	RH Lens, glass	for 084.234 lamp only
	084.238	**1**	LH Lens, glass	for 084.235 lamp only
16	**084.239**	**2**	Amber lens, glass	for 084.234/5 lamps only
17	**084.236**	**2**	Seal, rubber	
18	**084.062**	**2**	Bulb, flasher 21W	
19	**084.069**	**2**	Bulb, side lamp 5W	
20	**084.063**	**2**	Bulb, flasher & side 21/5 W	

ILL N°	PART N°	QTY	DESCRIPTION	APPLICATION
21	**084.298**	**2**	Contacter for flasher	
22	**084.333**	**2**	Contacter for side lamp	
23	**084.316**	**2**	Contacter for flasher & side lamp	
24	**084.083**	**2**	Dust excluder, large	
25	**084.269**	**2**	Dust excluder, small	
26	**163.013**	**4**	Washer, plain	
27	**164.015**	**4**	Washer, spring	
28	**161.024**	**4**	Nut	
29	**084.191**	**2**	Fog lamp assembly	
	084.193	**2**	Spot lamp assembly	
30	**084.194**	**2**	Light unit for fog lamp	
31	**084.196**	**2**	Light unit for spot lamp	
32	**084.198**	**2**	Bulb for fog lamp	
	084.119	**2**	Bulb for spot lamp	
33	**084.197**	**2**	Bulb holder	
34	**083.044**	**4**	Terminal, sleeve type	
35	**162.378**	**2**	Screw, clamp fixing	
36	**141.205**	**2**	Clamp, light fixing	
37	**122.079**	**2**	Cushion, lamp	
38	**162.381**	**2**	Bolt, lamp fixing	
39	**141.409**	**2**	Cone base	
40	**164.034**	**2**	Washer, lock	
41	**161.121**	**2**	Nut	
42	**185.337**	**2**	Fog or Spotlamp protector	
43	**140.289**	**1**	Badge bar & lamp brackets	Sprite MK2 - Midget MK1
44	**140.391**	**1**	Badge bar	Sprite MK2 - Midget MK1

© Van Gestel C&B 1997

Sprite MK I

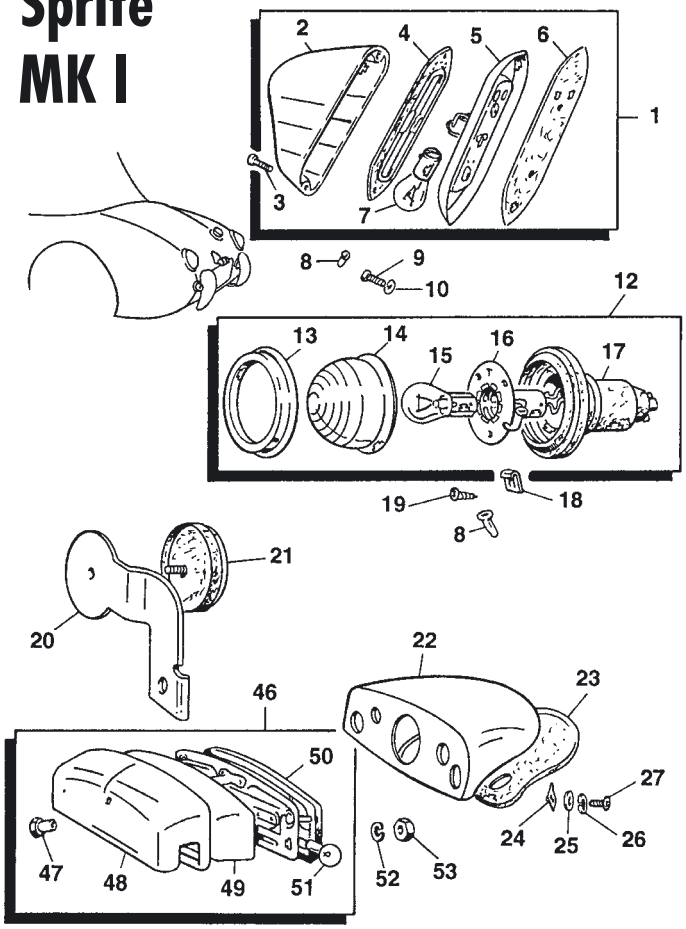

Sprite MK II & Midget MK I

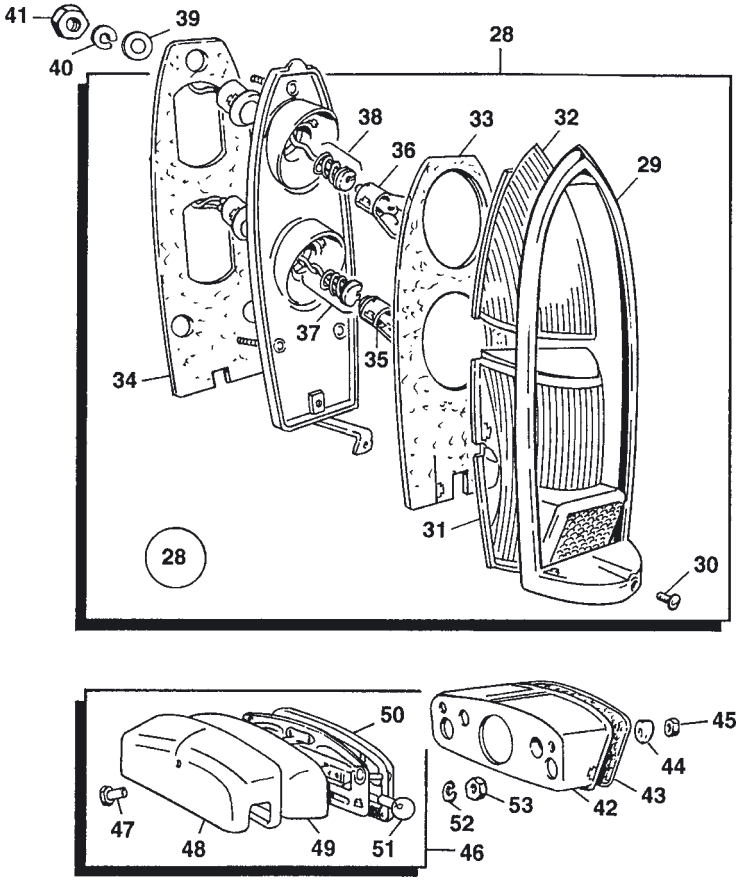

ILL N°	PART N°	QTY	DESCRIPTION	APPLICATION
	SPRITE MK1			
1	**084.033**	**2**	Stop and Tail lamp assembly	
2	**084.031**	**2**	Lens	
3	**162.378**	**4**	Screw	
4	**084.032**	**2**	Seal, lens	
5	**084.393**	**2**	Base plate & socket	
6	**084.034**	**2**	Seal, base to body	
7	**084.063**	**2**	Bulb 21/5 W	
8	**083.044**	**10**	Wire connector, sleeve type	
9	**162.060**	**4**	Screw, fixing	
10	**164.015**	**4**	Washer, spring	
12	**084.024**	**2**	Amber flasher lamp assembly	European market
	084.173	**2**	Red flasher lamp assembly	USA market
13	**084.080**	**2**	Rim, chrome	
14	**084.089**	**2**	Amber lens, glass	European market
	084.090	**2**	Red lens, glass	USA market
15	**084.062**	**2**	Bulb, 21W	
16	**084.175**	**2**	Socket	
17	**084.092**	**2**	Body, rubber	
18	**161.315**	**6**	Spire nut, clip	
19	**162.588**	**6**	Screw, fixing	
20	**135.775**	**1**	RH Bracket, reflector	
	135.776	**1**	LH Bracket, reflector	
21	**084.209**	**2**	Reflector & chrome rim	
22	**135.013**	**1**	Plinth, number plate lamp	
23	**084.388**	**1**	Seal, plinth to body	
24	**172.679**	**2**	Spire nut, clip	
25	**163.013**	**2**	Washer, plain	
26	**164.015**	**2**	Washer, spring	
27	**162.055**	**2**	Screw	

ILL N°	PART N°	QTY	DESCRIPTION	APPLICATION
	SPRITE MK2 & MIDGET MK1			
28	**084.056**	**2**	Rear lamp assembly Amber and red	European market
	084.408	**2**	Rear lamp assembly all red	USA market
29	**084.059**	**2**	Retaining rim, chrome	
30	**162.403**	**2**	Screw, rim retaining	
31	**084.060**	**2**	Lens, stop & tail, red	with reflector
32	**084.061**	**2**	Lens, flasher, amber	European market
	084.270	**2**	Lens, flasher, red	USA market
33	**084.058**	**2**	Gasket, lens seating	
34	**084.057**	**2**	Gasket, lamp to body	
35	**084.063**	**2**	Bulb, stop & tail 21/5 W	
36	**084.062**	**2**	Bulb, flasher 21 W	
37	**084.316**	**2**	Connector, double	
38	**084.298**	**2**	Connector, single	
39	**163.013**	**6**	Washer, plain	
40	**164.015**	**6**	Washer, spring	
41	**161.024**	**6**	Nut	
42	**133.404**	**1**	Plint, number plate lamp	
43	**121.143**	**1**	Seal, plinth	
44	**163.193**	**2**	Distance piece	
45	**161.012**	**2**	Nut, nylonloc	
46	**084.023**	**1**	Number plate lamp assembly	
47	**162.382**	**1**	Nut, chrome plated	
48	**084.206**	**1**	Cover, chrome plated	
49	**084.142**	**1**	Lens	
50	**084.141**	**1**	Seal, rubber	
51	**084.069**	**2**	Bulb	
52	**164.015**	**2**	Washer, spring	
53	**161.024**	**2**	Nut	

© Van Gestel C&B 1997

Body & front end

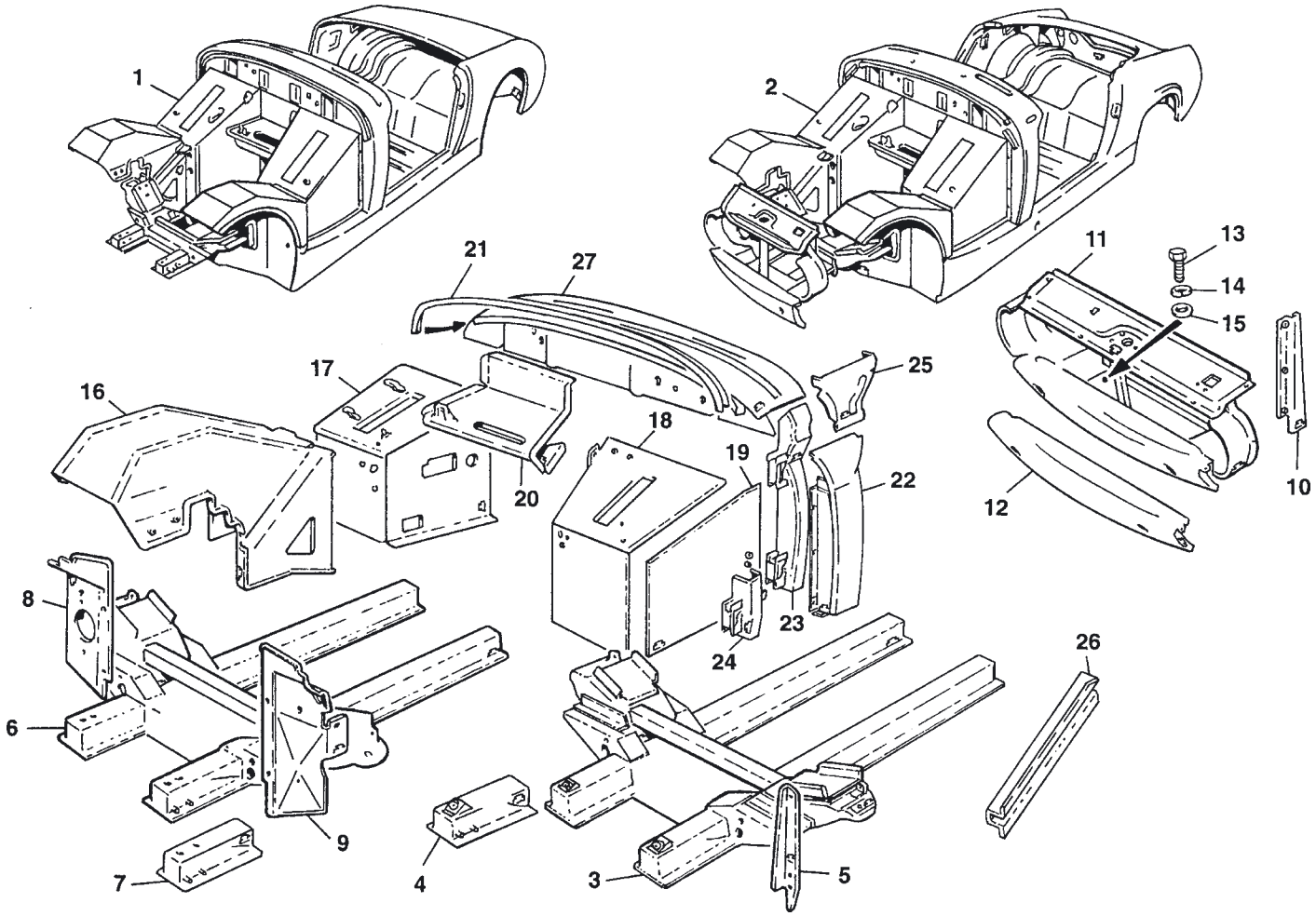

ILL N°	PART N°	QTY	DESCRIPTION	APPLICATION
1	**130.084**	**1**	Body assembly, excluded bonnet and doors	Sprite MK1
2	**130.087**	**1**	Body assembly, excluded bonnet, front wings, doors and boot lid	Sprite MK2 - Midget MK1
3	**131.553**	**1**	'H' Frame	Sprite MK1
4	**132.745**	**1**	RH Repair section, front	Sprite MK1
	132.746	**1**	LH Repair section, front	Sprite MK1
5	**132.640**	**1**	RH Radiator support	Sprite MK1
	132.641	**1**	LH Radiator support	Sprite MK1
6	**131.250**	**1**	'H' Frame	Sprite MK2 - Midget MK1
7	**132.745**	**1**	RH Repair section, front	Sprite MK2 - Midget MK1
	132.746	**1**	LH Repair section, front	Sprite MK2 - Midget MK1
8	**132.544**	**1**	RH Splash plate	
9	**132.545**	**1**	LH Splash plate	
10	**132.238**	**1**	RH Radiator support	Sprtie MK2 - Midget MK1
	132.239	**1**	LH Radiator support	Sprite MK2 - Midget MK1
11	**131.246**	**1**	Front panel assembly	Sprite MK2 - Midget MK1
12	**132.269**	**1**	Front valance with reinforcement membre	Sprite MK2 - Midget MK1
13	**162.077**	**4**	Screw, panel to 'H' frame	Sprite MK2 - Midget MK1
14	**164.012**	**4**	Washer, spring	Sprite MK2 - Midget MK1
15	**163.011**	**4**	Washer, plain	Sprite MK2 - Midget MK1
16	**131.551**	**1**	RH Wheel arch	Sprite MK1
	131.552	**1**	LH Wheel arch	Sprite MK1
	131.252	**1**	RH Wheel arch	Sprite MK2 - Midget MK1
	131.253	**1**	LH Wheel arch	Sprite MK2 - Midget MK1
17	**131.765**	**1**	RH Footwell box	Need some adjustments
18	**131.764**	**1**	LH Footwell box	Need some adjustments
19	**132.240**	**1**	RH Outer footwell panel	
	132.241	**1**	LH Outer footwell panel	
20	**132.623**	**1**	Repair panel, battery tray	
21	**134.493**	**1**	Repair piece, support channel bonnet to bulkhead	
22	**132.232**	**1**	RH Outer panel, 'A' post	
	132.233	**1**	LH Outer panel, 'A' post	
23	**136.039**	**1**	RH Inner pillar assembly	
	136.040	**1**	LH Inner pillar assembly	
	132.236	**1**	RH Inner pillar repair	Not illustrated
	132.237	**1**	LH Inner pillar repair	Not illustrated
24	**136.001**	**1**	RH Lower hinge repair panel	
	136.002	**1**	LH Lower hinge repair panel	
25	**135.777**	**1**	RH 'A' Post extension	
	135.778	**1**	LH 'A' Post extension	
26	**134.497**	**1**	RH Strut, front suspension	
	134.498	**1**	LH Strut, front suspension	
27	**131.810**	**1**	Schroud, top assembly, complete	Sprite MK1

© Van Gestel C&B 1997

Rear end, floor and sills

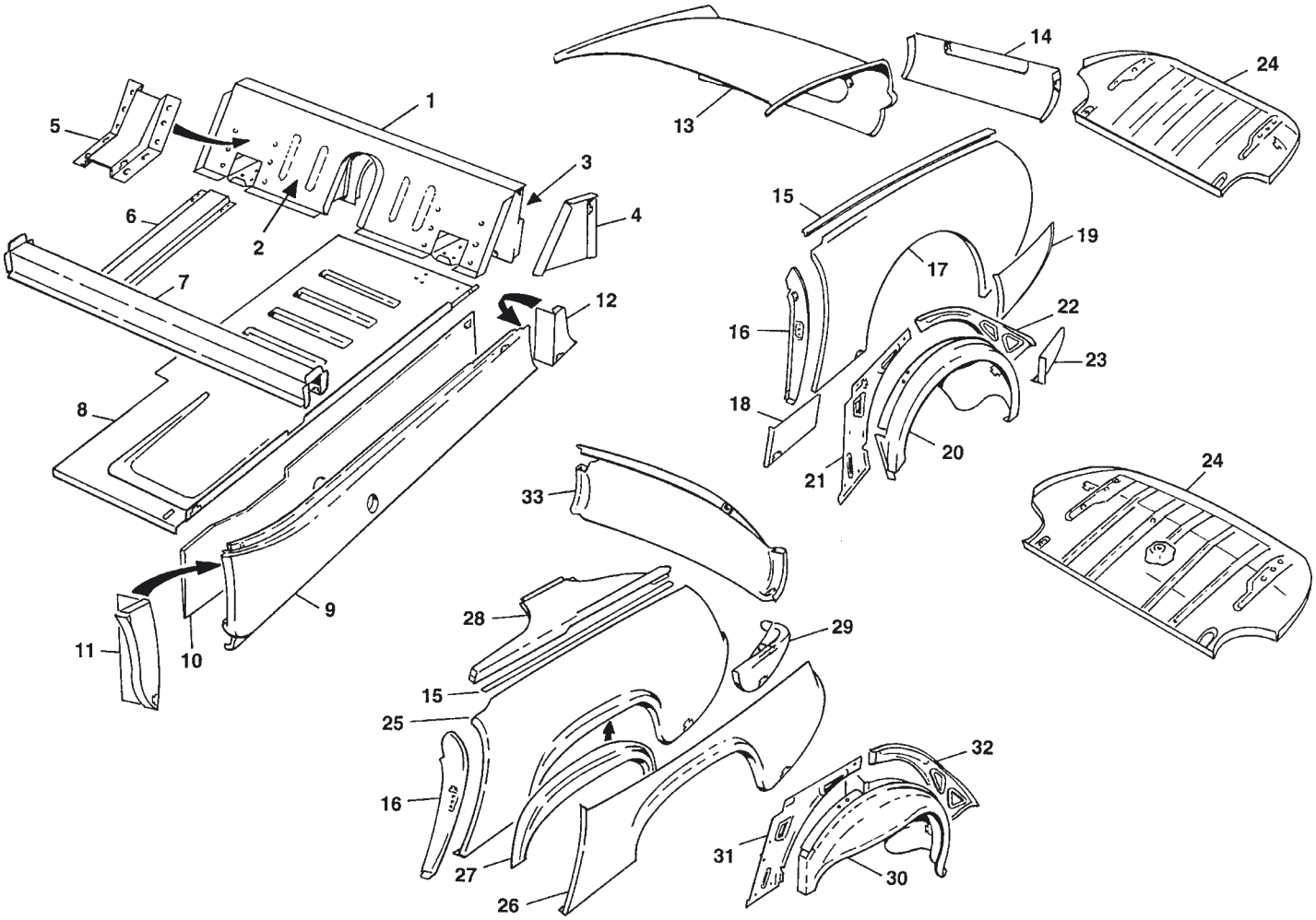

ILL N°	PART N°	QTY	DESCRIPTION	APPLICATION
1	**131.807**	**1**	Complete rear bulkhead	Sprite MK1
	131.808	**1**	Complete rear bulkhead	Sprite MK2 - Midget MK1
2	**131.554**	**1**	Panel, front side, inner	
3	**131.555**	**1**	Panel, rear side, outer	
4	**133.971**	**2**	Pair closing plates	Sprite MK1
	135.779	**2**	Pair closing plates	Sprite MK2 - Midget MK1
5	**132.579**	**2**	Reinforcement bracket	
6	**134.220**	**2**	Floor strenght	
7	**131.258**	**1**	Cross member	
8	**131.271**	**1**	RH Floor panel	
	131.272	**1**	LH Floor panel	
9	**131.230**	**1**	RH Outer sill	
	131.231	**1**	LH Outer sill	
10	**131.256**	**1**	RH Inner sill	
	131.257	**1**	LH Inner sill	
11	**133.407**	**1**	RH Front closing plate	
	133.408	**1**	LH Front closing plate	
12	**133.409**	**1**	RH Rear closing plate	
	133.410	**1**	LH Rear closing plate	
13	**131.790**	**1**	Centre panel	Sprite MK1
14	**131.809**	**1**	Repair piece, lower	Sprite MK1
15	**134.116**	**A/R**	Beading strip, 100 cm	
16	**132.489**	**1**	RH 'B' Post	
	132.490	**1**	LH 'B' Post	
17	**131.462**	**1**	RH Rear wing	Sprite MK1
	131.463	**1**	LH Rear wing	Sprite MK1
18	**132.588**	**1**	RH Repair piece, front	Sprite MK1
	132.589	**1**	LH Repair piece, front	Sprite MK1
19	**132.590**	**1**	RH Repair piece, rear	Sprite MK1
	132.591	**1**	LH Repair piece, rear	Sprite MK1

ILL N°	PART N°	QTY	DESCRIPTION	APPLICATION
20	**132.491**	**1**	RH Outer wheel arch	Sprite MK1
	132.492	**1**	LH Outer wheel arch	Sprite MK1
	132.493	**1**	RH Inner wheel arch	Sprite MK1
	132.494	**1**	LH Inner wheel arch	Sprite MK1
21	**136.033**	**1**	RH 'B' Post reinforcement Sprite MK1	
	136.034	**1**	LH 'B' Post reinforcement Sprite MK1	
22	**136.037**	**1**	RH Gusset panel	Sprite MK1
	136.038	**1**	LH Gusset panel	Sprite MK1
23	**135.015**	**1**	RH Panel, floor/wing	Sprite MK1
	135.016	**1**	LH Panel, floor/wing	Sprite MK1
24	**131.797**	**1**	Boot floor repair panel	alternative for AH MK1
25	**131.800**	**1**	RH Rear wing	Sprite MK2 - Midget MK1
	131.801	**1**	LH Rear wing	Sprite MK2 - Midget MK1
26	**131.267**	**1**	RH Half rear wing	Sprite MK2 - Midget MK1
	131.268	**1**	LH Half rear wing	Sprite MK2 - Midget MK1
27	**132.255**	**1**	RH Wheel arch repair	Sprite MK2 - Midget MK1
	132.256	**1**	LH Wheel arch repair	Sprite MK2 - Midget MK1
28	**131.802**	**1**	RH Panel wing/boot lid	Sprite MK2 - Midget MK1
	131.803	**1**	LH Panel wing/boot lid	Sprite MK2 - Midget MK1
29	**132.253**	**1**	RH Panel floor/wing	Sprite MK2 - Midget MK1
	132.254	**1**	LH Panel floor/wing	Sprite MK2 - Midget MK1
30	**136.058**	**1**	RH Wheel arch	Sprite MK2 - Midget MK1
	136.059	**1**	LH Wheel arch	Sprite MK2 - Midget MK1
31	**136.060**	**1**	RH 'B' Post reinforcement Sprite MK2 - Midget MK1	
	136.061	**1**	LH 'B' Post reinforcement Sprire MK2 - Midget MK1	
32	**136.062**	**1**	RH Gusset panel	Sprite MK2 - Midget MK1
	136.063	**1**	LH Gusset panel	Sprite MK2 - Midget MK1
33	**131.575**	**1**	Rear valance panel	Sprite MK2 - Midget MK1

© Van Gestel C&B 1997

Sprite MK I bonnet

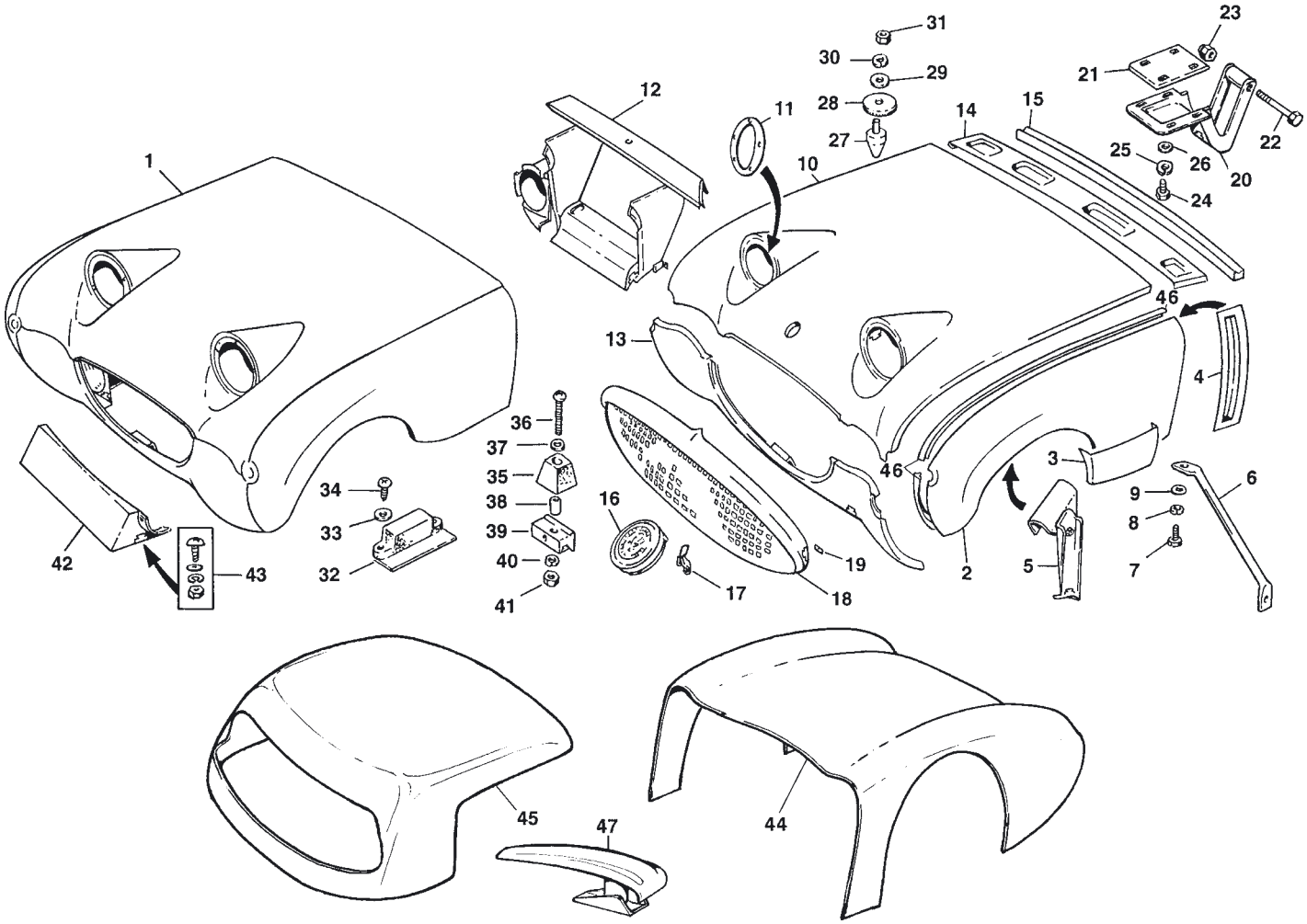

ILL N°	PART N°	QTY	DESCRIPTION
1	**130.026**	**1**	Bonnet assembly, steel
	130.083	**1**	Bonnet assembly, aluminium
	130.088	**1**	Bonnet assembly, fibre glass
2	**131.459**	**1**	RH Front wing
	131.460	**1**	LH Front wing
3	**132.621**	**1**	RH Repair panel, front wing
	132.622	**1**	LH Repair panel, front wing
4	**136.064**	**1**	RH Stiffener panel
	136.065	**1**	LH Stiffener panel
5	**135.740**	**1**	RH Bracket, stay bar
	135.741	**1**	LH Bracket, stay bar
6	**135.742**	**2**	Strut
7	**162.029**	**4**	Screw
8	**164.012**	**4**	Washer, spring
9	**163.010**	**4**	Washer, plain
10	**131.556**	**1**	Centre section
11	**133.051**	**2**	Ring, headlamp
12	**131.799**	**1**	Lower front, inner piece
13	**131.461**	**1**	Front valance
14	**134.491**	**1**	Stiffener panel, rear
15	**121.292**	**1**	Seal, rear
16	**141.398**	**1**	Badge, bonnet
17	**172.201**	**3**	Clip, badge
18	**140.207**	**1**	Grill, chrome
	140.308	**1**	Grill, stainless steel
19	**172.033**	**13**	Clip, grill
20	**132.287**	**2**	Hinge

ILL N°	PART N°	QTY	DESCRIPTION
21	**135.743**	**2**	Packing, hinge
22	**162.206**	**2**	Pivot bolt
23	**161.012**	**2**	Nut, nylon loc
24	**162.029**	**8**	Screw
25	**164.012**	**8**	Washer, spring
26	**163.097**	**8**	Washer, plain
27	**135.001**	**2**	Peg, bonnet lockating
28	**163.205**	**2**	Washer, rubber
29	**163.008**	**2**	Washer, plain
30	**164.002**	**2**	Washer, spring
31	**161.002**	**2**	Nut
32	**122.226**	**4**	Bonnet buffer
33	**163.034**	**8**	Washer, plain
34	**162.728**	**8**	Screw
35	**133.593**	**2**	Wheel arch buffer
36	**165.072**	**2**	Screw
37	**163.007**	**2**	Washer, plain
38	**135.744**	**2**	Distance tube
39	**133.924**	**2**	Spacer block
40	**164.015**	**2**	Washer, spring
41	**161.024**	**2**	Nut
42	**136.041**	**1**	Bracket, front number plate
43	**162.507**	**1**	Screw kit, bracket to bonnet
44	**130.089**	**1**	Rear end, fibre glass
45	**130.086**	**1**	White hard top, fibre glass
	130.085	**1**	Black hard top, fibre glass
46	**134.116**	**A/R**	Beading strip, 100 cm
47	**141.831**	**2**	Fixing clip for hard tops

© Van Gestel C&B 1997

Sprite MK I bonnet fittings & bumpers

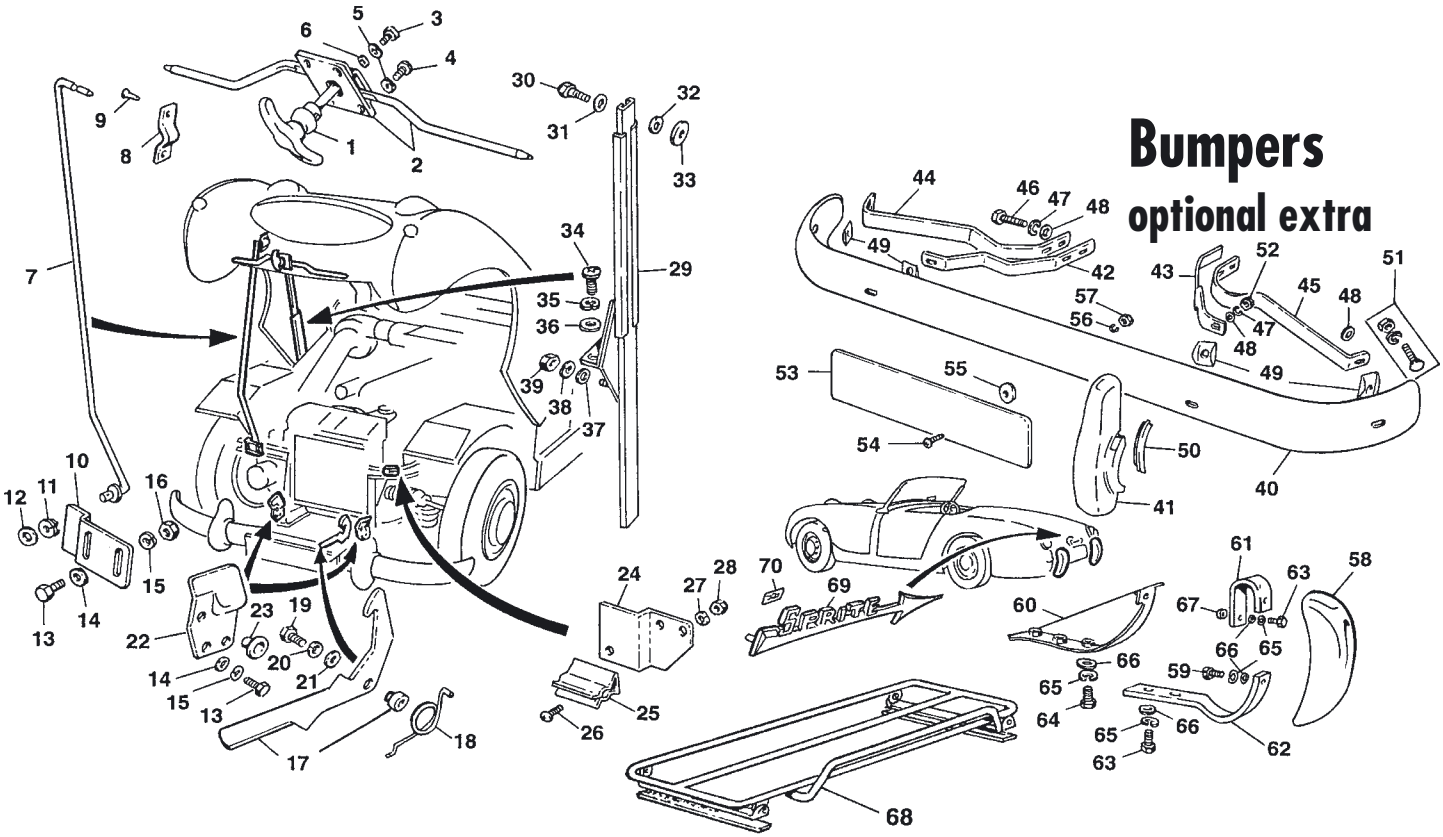

ILL N°	PART N°	QTY	DESCRIPTION
1	**141.421**	**1**	Handle, bonnet locking
2	**132.512**	**1**	Bonnet lock & rods
3	**165.093**	**1**	Screw, handle to lock
4	**162.060**	**4**	Screw, lock to bonnet
5	**164.015**	**5**	Washer, spring
6	**163.013**	**5**	Washer, plain
7	**134.339**	**1**	Auxilliary stay
8	**135.730**	**1**	Clip
9	**172.258**	**2**	Rivet
10	**135.731**	**1**	Bracket, stay
11	**164.030**	**1**	Double spring washer
12	**163.001**	**1**	Washer, plain
13	**162.029**	**A/R**	Screw
14	**163.010**	**A/R**	Washer, plain
15	**164.012**	**A/R**	Washer, spring
16	**161.019**	**A/R**	Nut
17	**133.780**	**1**	Safety hook & bush
18	**171.032**	**1**	Spring
19	**162.065**	**1**	Screw
20	**164.012**	**1**	Washer, spring
21	**163.097**	**1**	Washer, plain
22	**135.161**	**1**	RH Bracket, lock stricker
	135.162	**1**	LH Bracket, lock stricker
23	**135.745**	**2**	Bush
24	**135.780**	**1**	Bracket to hold clip
25	**172.034**	**1**	Clip, stay
26	**162.047**	**2**	Screw
27	**164.015**	**2**	Washer, spring
28	**161.024**	**2**	Nut
29	**134.323**	**2**	Bonnet stay
30	**162.874**	**2**	Bolt, stay to bonnet
31	**163.123**	**2**	Washer, waved
32	**163.001**	**2**	Washer, plain
33	**163.011**	**2**	Washer, plain
34	**162.409**	**4**	Screw
35	**164.012**	**4**	Washer, spring
36	**163.097**	**4**	Washer, flat
37	**163.013**	**2**	Washer, plain
38	**164.015**	**2**	Washer, spring
39	**161.024**	**2**	Nut

ILL N°	PART N°	QTY	DESCRIPTION
	BUMPERS, Optional extra		
40	**140.204**	**1**	Front bumper
41	**140.086**	**2**	Over rider with bolt
42	**132.436**	**1**	RH Inner mounting bar
43	**132.437**	**1**	LH Inner mounting bar
44	**132.438**	**1**	RH Outer mounting bar
45	**132.439**	**1**	LH Outer mounting bar
46	**162.066**	**4**	Bolt, mountings to frame
47	**164.006**	**6**	Washer, spring
48	**163.005**	**8**	Washer, plain
49	**133.339**	**4**	Packing piece, moon shape
50	**121.008**	**1**	1 Meter seal, overrider/bumper
51	**162.067**	**2**	Chrome bumper bolt assembly
52	**161.026**	**2**	Nut
53	**132.927**	**1**	Number plate backing, made from polished stainless steel
	132.046	**1**	Number plate backing, made from sheet metal (painted black)
54	**162.123**	**2**	Screw, plate fixing
55	**122.074**	**2**	Packing, washer
56	**164.012**	**2**	Washer, spring
57	**161.019**	**2**	Nut
58	**140.206**	**2**	Over rider, rear
59	**162.005**	**4**	Screw, over rider fixing
60	**135.012**	**2**	Bracket, inside boot
61	**132.434**	**2**	Bracket, upper
62	**132.435**	**2**	Bracket, lower
63	**162.022**	**6**	Screw, brackets
64	**162.033**	**2**	Screw, short
65	**164.002**	**12**	Washer, spring
66	**163.001**	**12**	Washer, plain
67	**122.209**	**2**	Sealing washer
68	**140.281**	**1**	Luggage rack, chrome plated, see also page 90
69	**141.420**	**1**	Badge, sprite
70	**172.033**	**2**	Clip, badge

More luggage racks: see page 90

© Van Gestel C&B 1997

Sprite MK II - Midget MK I: front wing, mouldings & bonnet

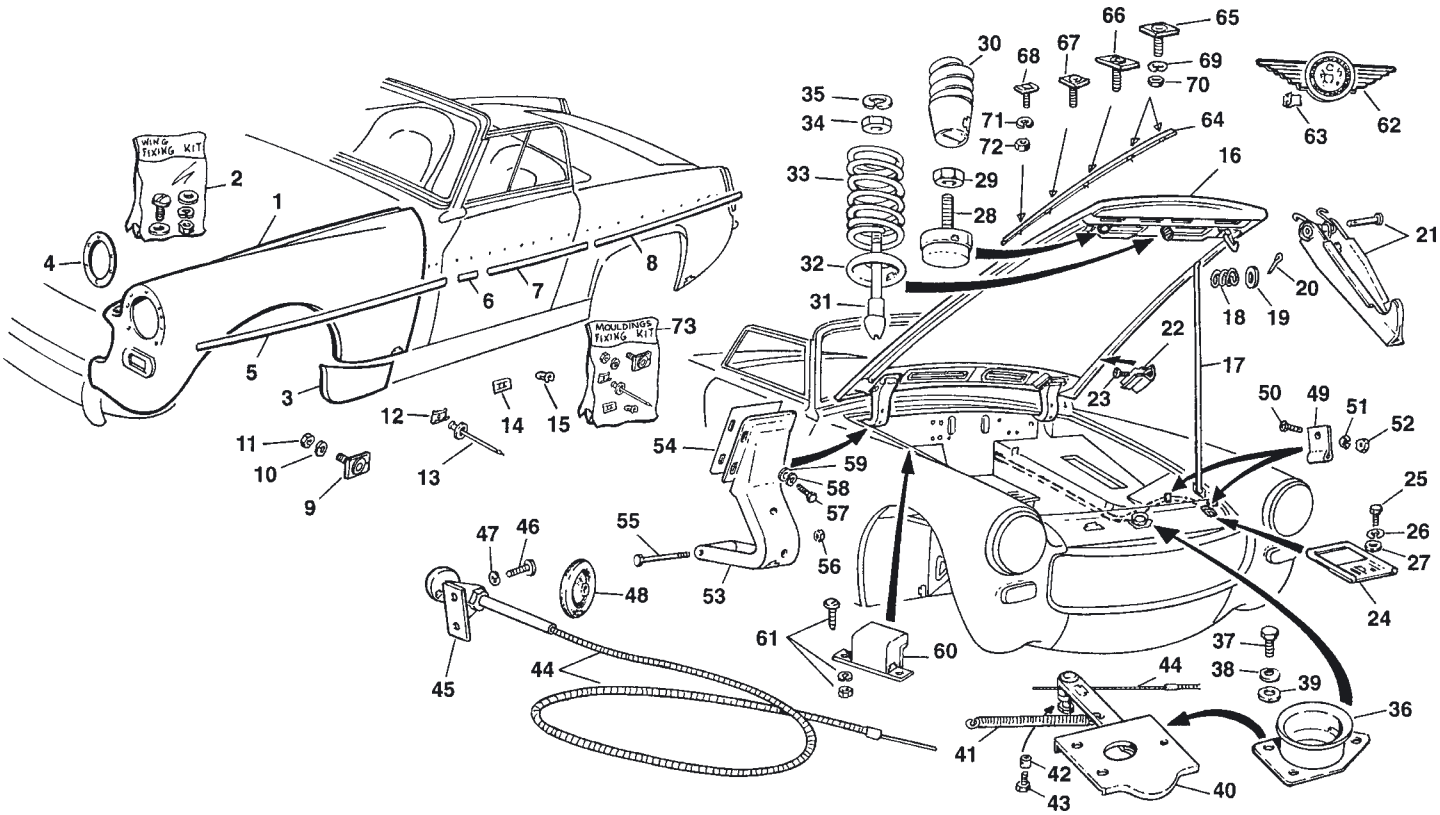

ILL N°	PART N°	QTY	DESCRIPTION
1	**131.240**	**1**	RH Front wing
	131.241	**1**	LH Front wing
2	**135.030**	**2**	Wing fixing kit
3	**132.282**	**1**	RH Lower repair panel
	132.283	**1**	LH Lower repair panel
4	**133.051**	**2**	Headlamp fixing rim
5	**134.117**	**2**	Moulding, front wing
6	**133.416**	**2**	Moulding, 'A' post
7	**134.118**	**1**	Moulding, RH door
	134.119	**1**	Moulding, LH door
8	**134.120**	**2**	Moulding, rear wing
9	**172.167**	**6**	Stud on plate
10	**163.013**	**6**	Washer, plain
	164.015	**6**	Washer, spring
11	**161.024**	**6**	Nut
12	**172.163**	**40**	Clip, moulding
13	**152.086**	**40**	Rivet
14	**172.033**	**2**	Clip, 'A' post moulding
15	**172.195**	**2**	Clip, 'A' post moulding
16	**131.239**	**1**	Bonnet
17	**134.492**	**1**	Bonnet prop
18	**171.005**	**1**	Spring
19	**163.001**	**1**	Washer
20	**162.294**	**1**	Split pin
21	**133.005**	**1**	Safety catch
22	**172.034**	**1**	Clip, prop
23	**162.047**	**2**	Screw
	164.015	**2**	Washer, spring
	161.024	**2**	Nut
24	**133.062**	**1**	Bracket, safety catch
25	**162.051**	**2**	Screw
26	**164.015**	**2**	Washer, spring
27	**163.013**	**2**	Washer, plain
28	**133.420**	**2**	Buffer, early style
29	**161.002**	**2**	Nut
30	**122.246**	**2**	Buffer, new style
31	**133.058**	**1**	Locking pin
32	**133.057**	**1**	Locking cap
33	**133.418**	**1**	Spring
34	**161.019**	**1**	Nut

ILL N°	PART N°	QTY	DESCRIPTION
35	**164.006**	**1**	Washer, spring
36	**133.059**	**1**	Cap, locating
37	**162.029**	**3**	Screw
38	**164.012**	**3**	Washer, spring
39	**163.010**	**3**	Washer, plain
40	**133.060**	**1**	Catch, release mechanism
41	**171.010**	**1**	Return sping
42	**133.419**	**1**	Clamp, cable
43	**162.135**	**1**	Screw, cable locking
44	**134.121**	**1**	Bonnet cable
45	**135.702**	**1**	Bracket
46	**162.047**	**2**	Screw
47	**164.015**	**2**	Washer, spring
48	**122.003**	**1**	Grommet, small
	122.301	**1**	Grommet, large
49	**172.434**	**2**	Clip, cable
50	**162.060**	**2**	Screw
51	**164.015**	**2**	Washer, spring
52	**161.024**	**2**	Nut
53	**132.287**	**2**	Hinge
54	**135.743**	**2**	Packing
55	**162.206**	**2**	Bolt, pivot
56	**161.012**	**2**	Nut, nylock
57	**162.029**	**8**	Screw
58	**164.012**	**8**	Washer, springh
59	**163.097**	**8**	Washer, plain
60	**133.422**	**2**	Buffer, side
61	**162.507**	**1**	Fastener kit
62	**141.259**	**1**	Bonnet badge, SPRITE
63	**172.201**	**4**	Clip, badge
64	**134.122**	**1**	Bonnet moulding, MIDGET
65	**172.197**	**2**	Clip, 1st & 2nd
66	**152.033**	**1**	Clip, 3rd
67	**172.199**	**1**	Clip, 4th
68	**172.200**	**1**	Clip, 5th
69	**164.015**	**3**	Washer, spring 3/16"
70	**161.024**	**3**	Nut, 3/16"
71	**164.023**	**2**	Washer, spring 1/8"
72	**161.054**	**2**	Nut, 1/8"
73	**137.364**	**1**	Fix kit for mouldings, contains ill. n° 9 till 15

© Van Gestel C&B 1997

Sprite MK II - Midget MK I: grill, luggage rack & boot lid

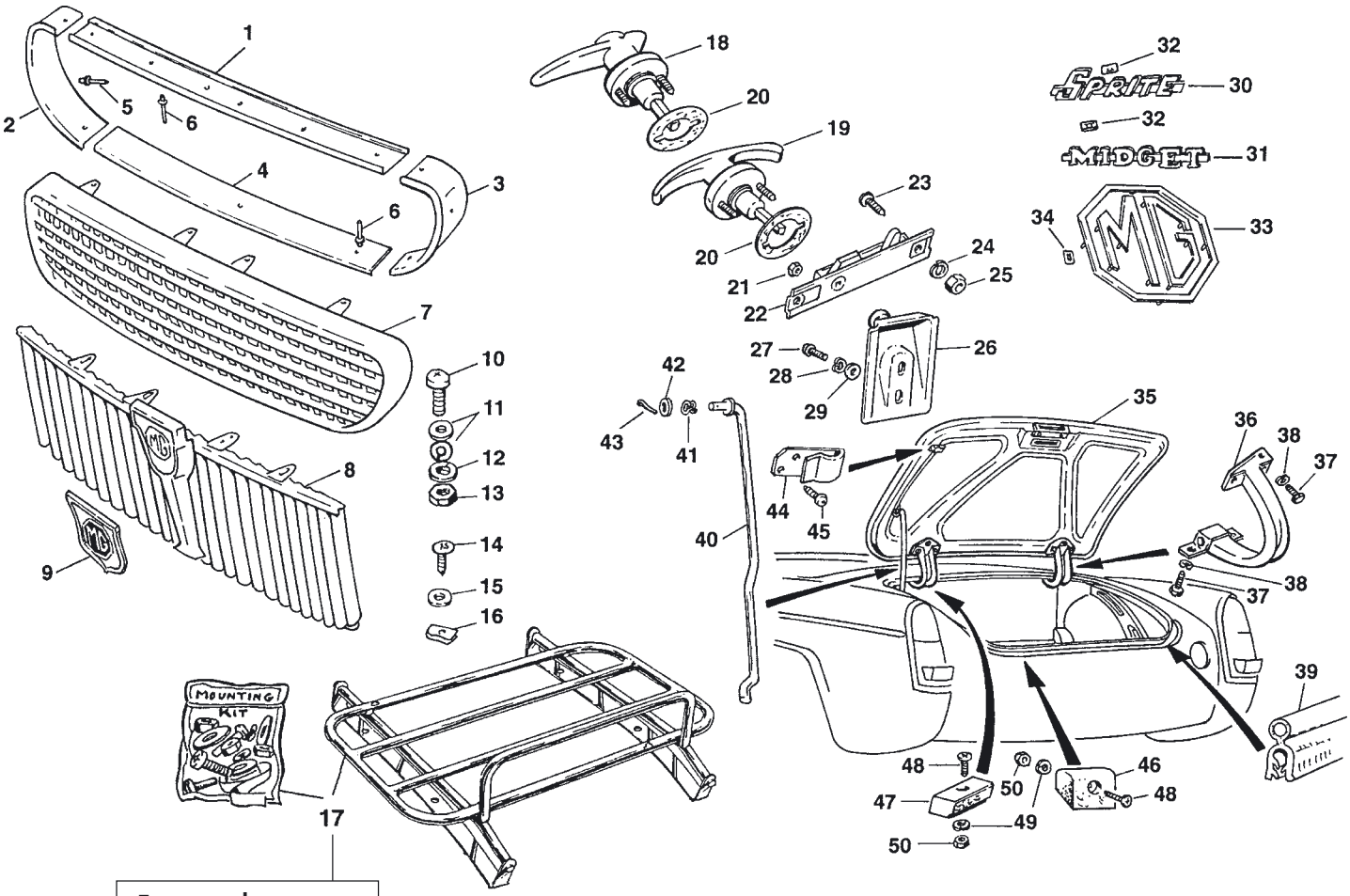

For more luggage racks see page 90

ILL N°	PART N°	QTY	DESCRIPTION
1	**140.113**	**1**	Finisher, upper (on bonnet)
2	**140.114**	**1**	Finisher, RH side
3	**140.115**	**1**	Finisher, LH side
4	**140.116**	**1**	Finisher, lower
5	**152.014**	**6**	Rivet, side
6	**152.039**	**10**	Rivet, uppet and lower
7	**140.112**	**1**	Grill, SPRITE
8	**140.111**	**1**	Grill, MIDGET
9	**141.044**	**1**	Badge, grill, MIDGET
10	**162.409**	**4**	Screw, upper fixing
11	**163.011**	**8**	Washer, plain
12	**164.012**	**4**	Washer, spring
13	**161.019**	**4**	Nut
14	**162.145**	**2**	Screw, lower fixing
15	**163.010**	**2**	Washer, plain
16	**172.169**	**2**	Spire nut
17	**140.099**	**1**	Luggage rack, chrome plated supplied with fittings
18	**141.572**	**1**	Handle, boot lid (1961)
19	**141.094**	**1**	Handle, boot lid ('62-'64)
20	**135.704**	**1**	Gasket
21	**161.047**	**2**	Nut, nylonlock
22	**133.424**	**1**	Lock mechanism
23	**162.045**	**2**	Screw
24	**164.002**	**2**	Washer, spring
25	**161.002**	**2**	Nut
26	**133.425**	**1**	Stricker plate
27	**162.060**	**2**	Screw
28	**164.015**	**2**	Washer, spring
29	**163.013**	**2**	Washer, plain
30	**141.261**	**1**	Badge,'SPRITE'
31	**141.260**	**1**	Badge,'MIDGET'
32	**172.033**	**2**	Clip, badge
33	**141.001**	**1**	Badge, MG
34	**172.031**	**13**	Clip
35	**131.236**	**1**	Boot lid (less fittings)
36	**133.067**	**1**	RH Hinge
	133.068	**1**	LH Hinge
37	**162.029**	**10**	Screw
38	**164.012**	**10**	Washer, spring
39	**121.155**	**1**	Seal, boot lid
40	**134.124**	**1**	Boot prop
41	**171.008**	**1**	Spring
42	**163.001**	**1**	Washer
43	**172.294**	**1**	Split pin
44	**172.030**	**1**	Clip, prop
45	**162.061**	**2**	Screw
46	**122.069**	**2**	Buffer, rear (1962 - on)
47	**122.175**	**2**	Buffer, front (1962 - on)
48	**162.584**	**4**	Screw
49	**164.023**	**4**	Washer, spring
50	**161.054**	**4**	Nut

© Van Gestel C&B 1997

Sprite MK II - Midget MK I: bumpers

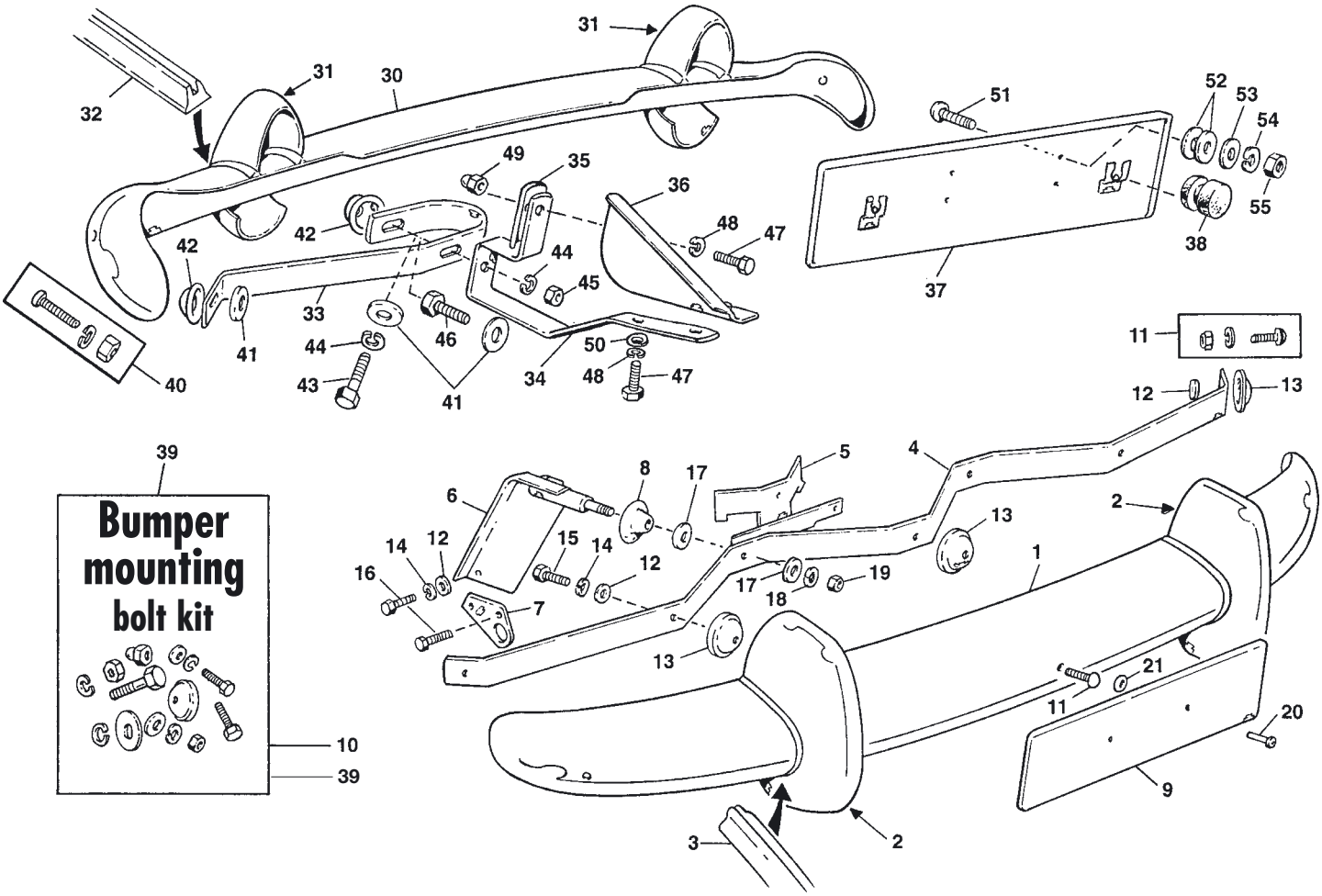

ILL N°	PART N°	QTY	DESCRIPTION
	FRONT BUMPER		
1	**140.102**	**1**	Front bumper blade
2	**140.103**	**2**	Over rider
3	**121.008**	**1**	1 Meter packing strip
4	**140.104**	**1**	Bumper spring bar
5	**135.747**	**1**	Mounting bracket
6	**133.456**	**1**	RH Bumper bracket
	133.457	**1**	LH Bumper bracket
7	**135.746**	**2**	Towing eye bracket
8	**121.009**	**2**	Grommet, front valance
9	**132.927**	**1**	Number plate back plate made from stainless steel
	132.046	**1**	Number plate back plate made from sheet metal
10	**135.783**	**1**	Front bumper bolting kit. Contains all bolts as listed below.
11	**162.068**	**3**	Chrome bumper bolt with spring washer and nut
12	**163.005**	**9**	Washer, plain
13	**163.065**	**5**	Spacer
14	**164.006**	**6**	Washer, spring
15	**162.066**	**2**	Bolt, over rider
16	**162.072**	**2**	Bolt, bumper bracket & eye
17	**163.031**	**4**	Washer, plain
18	**164.011**	**2**	Washer, spring
19	**161.045**	**2**	Nut
20	**162.125**	**2**	Screw, back plate fixing
	164.012	**2**	Washer, spring
	161.019	**2**	Nut
21	**122.074**	**2**	Packing, washer

ILL N°	PART N°	QTY	DESCRIPTION
	REAR BUMPER		
30	**140.105**	**1**	Rear bumper bar
31	**140.103**	**2**	Over rider
32	**121.008**	**1**	1 Meter packing strip
33	**132.296**	**2**	Bumper spring bar
34	**132.297**	**1**	RH Support bar
	132.298	**1**	LH Support bar
35	**141.269**	**2**	Finisher, support
36	**133.532**	**2**	Inner bracket
37	**132.928**	**1**	Number plate back plate made from stainless steel
	132.096	**1**	Number plate back plate made from sheet metal
38	**122.008**	**2**	Buffer rubber
39	**135.784**	**1**	Rear bumper bolting kit. Included all fasteners as listed below.
40	**162.068**	**2**	Chrome bumper bolt with spring washer and nut
41	**163.005**	**6**	Washer, plain
42	**163.065**	**4**	Distance piece
43	**162.066**	**2**	Bolt, over rider
44	**164.006**	**4**	Washer, spring
45	**161.026**	**2**	Nut
46	**162.072**	**2**	Bolt, spring bar to bracket
47	**162.005**	**8**	Screw
48	**164.002**	**8**	Washer, spring
49	**161.063**	**2**	Chrome 'D' nut
50	**163.001**	**6**	Washer, plain
51	**162.123**	**2**	Screw, back plate fixing
52	**122.074**	**4**	Packing washer
53	**163.011**	**2**	Washer, plain
54	**164.012**	**2**	Washer, spring
55	**161.019**	**2**	Nut

© Van Gestel C&B 1997

Windscreen

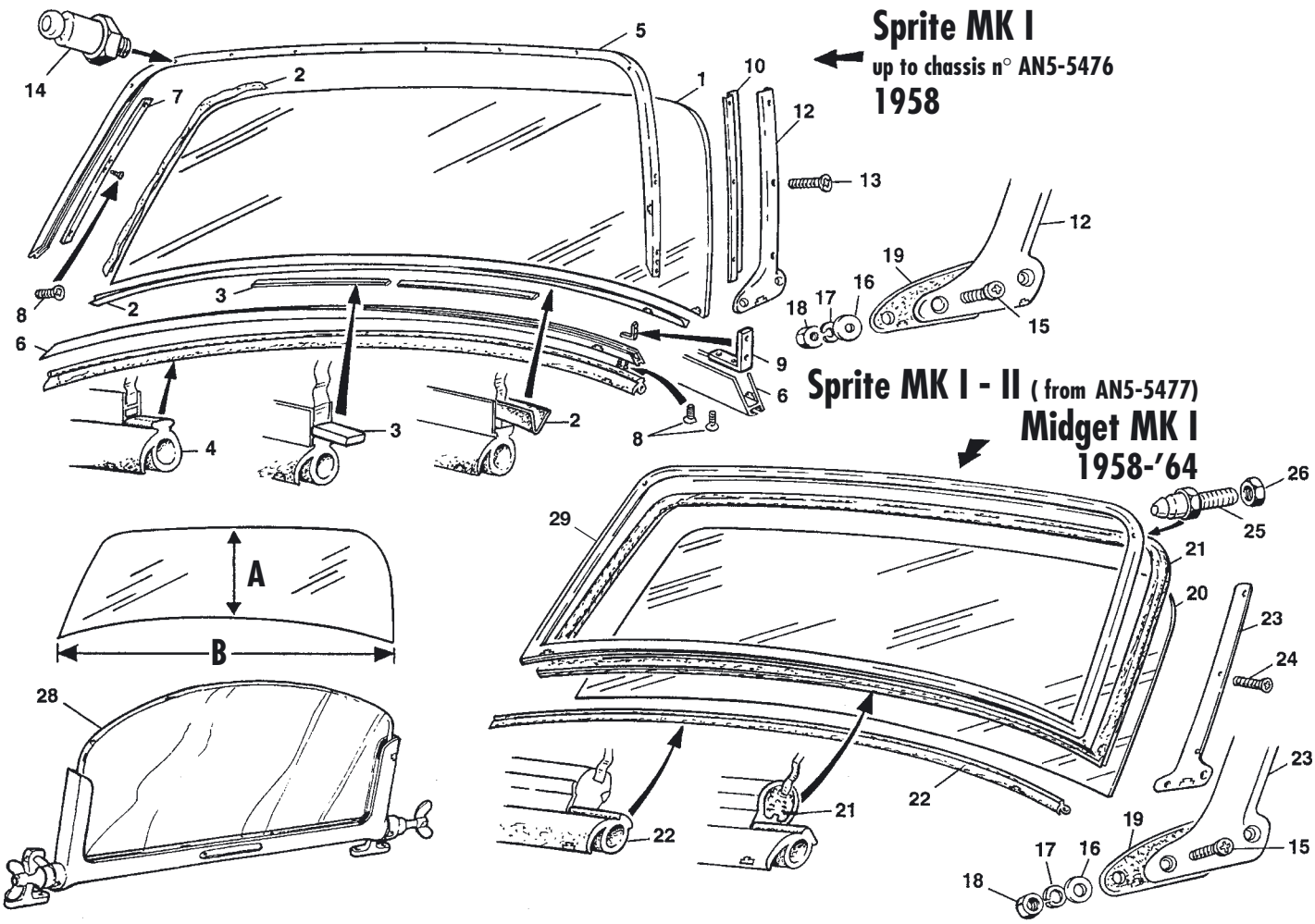

ILL N°	PART N°	QTY	DESCRIPTION	APPLICATION
1	**120.028**	**1**	Laminated windscreen glass 'A' = 295mm	Sprite MK1 to AN5-5476 'B' = 1205 mm
2	**121.199**	**1**	Glazing seal	Sprite MK1 to AN5-5476
3	**134.183**	**A/R**	Wood buffer, 30 cm long To adjust the clearance between glass and frame.	Sprite MK1 to AN5-5476
4	**121.201**	**1**	Seal, frame to body	Sprite MK1 to AN5-5476
5	**140.323**	**1**	Frame, upper piece	Sprite MK1 to AN5-5476
6	**140.324**	**1**	Frame, lower piece	Sprite MK1 to AN5-5476
7	**135.785**	**2**	Tapping plate	Sprite MK1 to AN5-5476
8	**165.099**	**10**	Screw, frame assembling	Sprite MK1 to AN5-5476
9	**135.786**	**2**	Corner bracket, lower	Sprite MK1 to AN5-5476
10	**141.662**	**1**	RH Angle for side screen	Sprite MK1 to AN5-5476
	141.663	**1**	LH Angle for side screen	Sprite MK1 to AN5-5476
12	**140.325**	**1**	RH Pillar	Sprite MK1 to AN5-5476
	140.326	**1**	LH Pillar	Sprite MK1 to AN5-5476
13	**162.634**	**2**	Screw, pillar/frame - short	Sprite MK1 to AN5-5476
	162.403	**4**	Screw, pillar/frame - long	Sprite MK1 to AN5-5476
14	**152.002**	**9**	Peg, hood fastener CUT THE THREAD TO LENGTH !	Sprite MK1 to AN5-5476
15	**162.726**	**4**	Screw, pillar to body	
16	**163.008**	**4**	Washer, plain	
17	**164.002**	**4**	Washer, spring	
18	**161.002**	**4**	Nut	
19	**121.204**	**2**	Pad, pillar to body	
20	**120.029**	**1**	Laminated windscreen glass 'A' = 287mm 'B' = 1180mm	from AN5-5476 on
21	**121.202**	**1**	Glazing rubber and filling strip	from AN5-5476 on
22	**121.203**	**1**	Seal, windscreen to body	from AN5-5476 on
23	**140.309**	**1**	RH Screen pillar	
	140.310	**1**	LH Screen pillar	
24	**162.403**	**6**	Screw, pillar to frame	
25	**152.002**	**2**	Peg, hood	
26	**161.024**	**2**	Nut	
28	**185.017**	**2**	Period Aeroscreen for racing, sport or just for fun. Very beautifully finisched, * high polished aluminium frame, * laminated safety glass and * chrome plated fittings.	
29	**140.371**	**1**	Frame	from AN5-5476-on

© Van Gestel C&B 1997

Doors, sidescreens & fittings

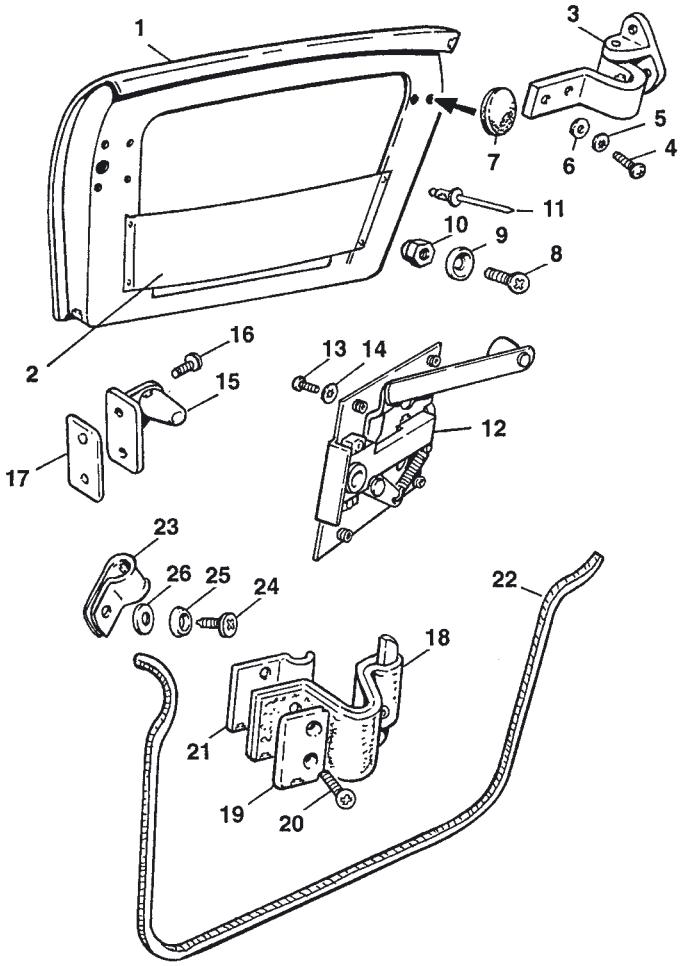

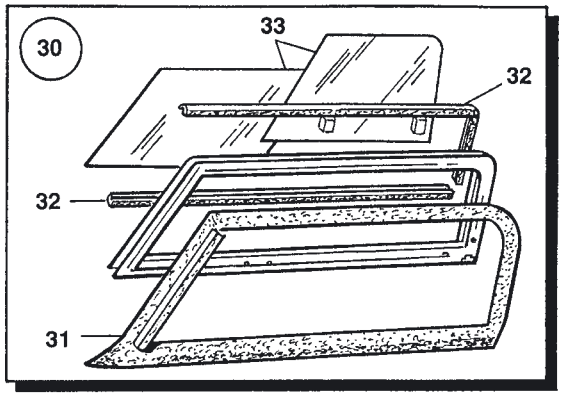

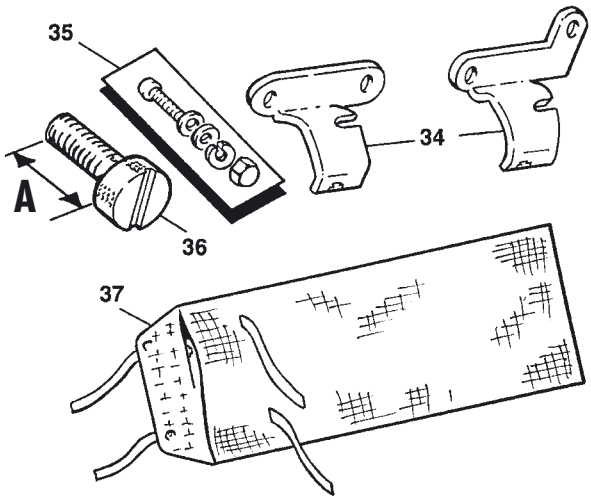

ILL N°	PART N°	QTY	DESCRIPTION
1	**131.414**	**1**	RH Door, less pocket panel
	131.415	**1**	LH Door, less pocket panel
2	**136.072**	**1**	Pair door pocket panels NOT TRIMMED
3	**135.333**	**4**	Hinge
4	**162.409**	**20**	Screw, hinge
5	**164.012**	**20**	Washer, spring
6	**163.097**	**8**	Washer, plain
7	**122.239**	**8**	Plug (early cars only)
8	**162.059**	**8**	Screw, pocket panel, lower
9	**163.057**	**8**	Washer, cup
10	**161.047**	**8**	Nut, nylon lock
11	**152.113**	**4**	Rivet, upper
12	**133.689**	**1**	RH Lock
	133.690	**1**	LH Lock
13	**162.060**	**8**	Screw, lock to door
14	**164.015**	**8**	Washer, spring
15	**133.036**	**2**	Stricker door lock
16	**162.146**	**4**	Screw, stricker
17	**133.100**	**A/R**	Shim, adjusting plate
18	**133.468**	**2**	Black door strap
	159.051	**2**	Red door strap
19	**133.968**	**2**	Outer bracket
20	**162.117**	**4**	Screw
21	**135.707**	**2**	Inner bracket
22	**150.038**	**1**	Door seal for 2 sides Black velour and rubber seal
	150.039	**1**	Door seal for 2 sides Red velour and rubber seal
	150.040	**1**	Door seal for 2 sides Black PVC and rubber seal
23	**172.144**	**2**	Door seal retainer Sprite MK1 only
24	**162.813**	**2**	Screw
25	**163.038**	**2**	Cup washer
26	**163.012**	**2**	Washer, plain
30	**153.315**	**1**	RH Side screen, less brackets
	153.316	**1**	LH Side screen, less brackets
31	**121.246**	**1**	RH Outer seal
	121.247	**1**	LH Outer seal
32	**135.128**	**4**	Felt strip
33	**159.047**	**2**	Pair perspex. Knobs are supplied but have to be glueed-on after fitting the perspex into the frame.
34	**135.748**	**1**	Set of 4 brackets
35	**135.696**	**1**	Set all fasteners, brackets to frames. 40 pieces
36	**162.616**	**4**	Thrumb screw, up to Sept.'62 'A' = 22 mm
	162.617	**4**	Thrumb screw, Sept.'62-on 'A' = 32 mm
37	**135.002**	**1**	Side screen stowage bag

© Van Gestel C&B 1997

Cockpit mouldings & mirrors

Sprite MK I '58 -'61 | Sprite MK II - Midget MK I 948 cc '61 -'62 | Sprite MK II - Midget MK I 1098 cc '62 -'64

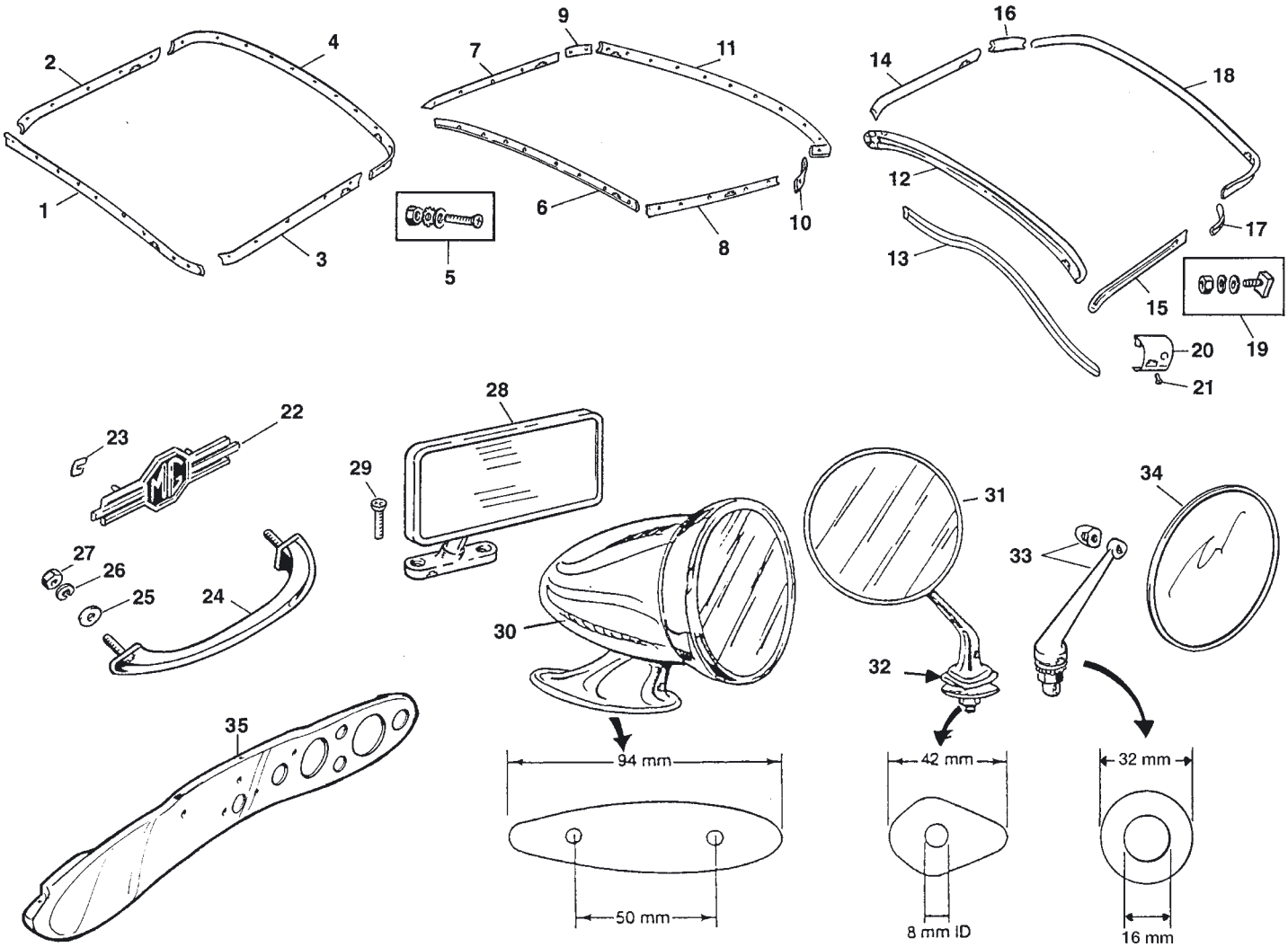

ILL N°	PART N°	QTY	DESCRIPTION	APPLICATION
1	**134.500**	**1**	Moulding, Scuttle top	Sprite MK1
2	**134.501**	**1**	Moulding, RH Door top	Sprite MK1
3	**134.502**	**1**	Moulding, LH Door top	Sprite MK1
4	**134.503**	**1**	Moulding, Rear	Sprite MK1
5	**135.695**	**1**	Screw Kit, Cockpit capping	
6	**134.500**	**1**	Moulding, Scuttle top NOT TO BE TRIMMED	Sprite MK2 and
	134.504	**1**	Moulding, Scuttle top TO BE TRIMMED is included in our trim kit.	Midget MK1 to AN1-16183 Material to recover this
7	**134.501**	**1**	Moulding, RH Door top Midget MK1 948cc '61-'62	Sprite MK2 948cc '61-'62
8	**134.502**	**1**	Moulding, RH Door top Midget MK1 948cc '61-'62	Sprite MK2 948cc '61-'62
9	**135.788**	**1**	Moulding, RH Corner Midget MK1 948cc '61-'62	Sprite MK2 948cc '61-'62
10	**135.789**	**1**	Moulding, LH Corner Midget MK1 948cc '61-'62	Sprite MK2 948cc '61-'62
11	**134.505**	**1**	Moulding, Rear Midget MK1 948cc '61-'62	Sprite MK2 948cc '61-'62
12	**134.506**	**1**	Moulding, Scuttle top TO BE TRIMMED is included in our trim kit.	Sprite & Midget 1098cc'62- Material to receover these
13	**134.507**	**1**	Moulding, LHD Dash TO BE TRIMMED	Sprite & Midget 1098cc '62-
	134.508	**1**	Moulding, RHD Dash TO BE TRIMMED	Sprite & Midget 1098cc '62-

ILL N°	PART N°	QTY	DESCRIPTION	APPLICATION
14	**134.509**	**1**	Moulding, RH Door top	Sprite & Midget 1098cc '62-
15	**134.510**	**1**	Moulding, LH Door top	Sprite & Midget 1098cc '62-
16	**135.790**	**1**	Moulding, RH Corner	Sprite & Midget 1098cc '62-
17	**135.791**	**1**	Moulding, LH Corner	Sprite & Midget 1098cc '62-
18	**134.511**	**1**	Moulding, Rear TO BE TRIMMED	Sprite & Midget 1098cc '62-
19	**162.311**	**3**	Kit of 9 stud plates, washers and nuts	Sprite & Midget 1098cc '62-
20	**141.664**	**2**	RH Capping, door top	Sprite & Midget 1098cc '62-
	141.665	**2**	LH Capping, door top	Sprite & Midget 1098cc '62-
21	**165.100**	**4**	Screw, capping	
22	**083.018**	**1**	Dashboard badge, MG	
23	**172.021**	**2**	Clip, MG badge	
24	**141.435**	**1**	Dashboard handle, SPRITE	
25	**163.011**	**2**	Washer, plain	
26	**164.012**	**2**	Washer, spring	
27	**161.019**	**2**	Nut	
28	**141.548**	**1**	Interior mirror	
29	**162.403**	**2**	Screw	
30	**141.070**	**2**	Period Sport Mirror	
31	**141.011**	**1**	RH Wing mirror, Lucas type	
	141.012	**1**	LH Wing mirror, Lucas type	
32	**122.072**	**2**	Rubber stem seal	
33	**141.116**	**2**	RH or LH Mirror arm on spring	
34	**141.117**	**2**	Round mirror for 141.116	
35	**138.034**	**1**	LH dashboard	
	138.035	**1**	RH dashboard	

For more mirrors see page 91

© Van Gestel C&B 1997

Grommets & blanking plugs

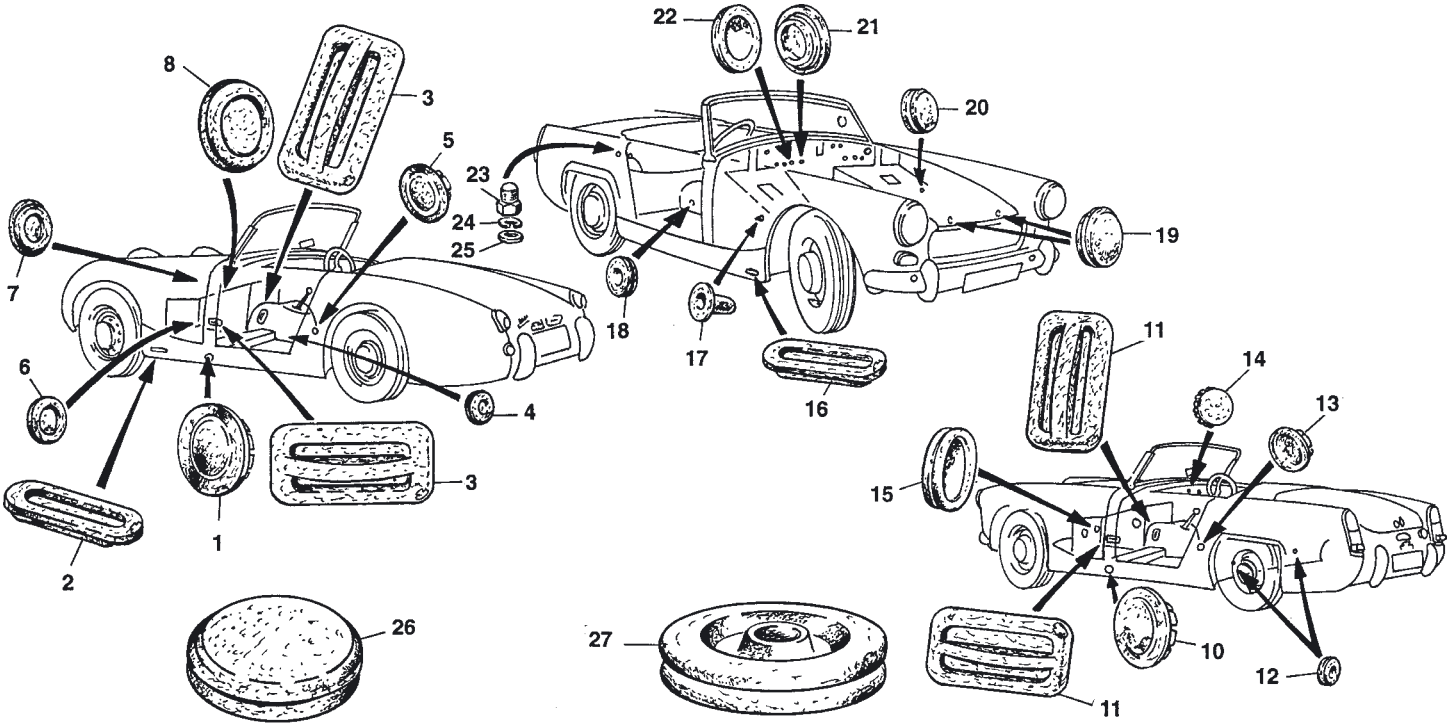

Self adhesive badges (plugs) 27 mm diameter

085.364

085.358

085.359

085.366

085.362

ILL N°	PART N°	QTY	DESCRIPTION	APPLICATION
	SPRITE MK1			
1	**122.166**	**2**	Plug, jacking hole	
2	**122.186**	**2**	Plug, floor hole	
3	**122.169**	**2**	Plug, Tunnel	
4	**122.020**	**2**	Plug, cross panel - 3/8"	
5	**122.167**	**1**	Plug, propeller shaft acces	
6	**122.319**	**1**	Plug, to be pierced (heater)	
7	**122.027**	**1**	Plug, LH foot well	
8	**122.030**	**1**	Plug, steering column hole	
	SPRITE MK2 - MIDGET MK1			
10	**122.166**	**2**	Plug, jacking hole	
11	**122.169**	**2**	Plug, tunnel	
12	**122.020**	**2**	Plug, rear cross panel - 3/8"	
13	**122.167**	**1**	Plug, propeller shaft acces	
14	**052.054**	**1**	Plug, ignition switch - 3/4"	
15	**122.030**	**1**	Plug, steering column hole	
16	**122.186**	**2**	Plug, floor	
17	**122.174**	**2**	Plug, foot well side	
18	**122.173**	**2**	Plug, Safety belt fixing hole	
19	**122.026**	**2**	Plug, mud shield - 1"	
20	**122.027**	**1**	Plug, foot well top	
21	**122.171**	**1**	Plug, tacho cable hole	
22	**122.319**	**1**	Plug, dash	
23	**161.063**	**4**	'D' Nut, chrome plated	
24	**164.002**	**4**	Washer, spring	
25	**163.001**	**4**	Washer, plain	
	BLANKING GROMMETS			
26	**122.204**	**A/R**	To fit panel hole 3/16" -	4.7mm
	122.025	**A/R**	To fit hole size 1/4" -	6.3mm
	122.188	**A/R**	To fit hole size 5/16" -	7.9mm
	122.020	**A/R**	To fit hole size 3/8" -	9.5mm
	122.021	**A/R**	To fit hole size 1/2" - 12.7mm	
	122.027	**A/R**	To fit hole size 5/8" - 15.8mm	
	122.022	**A/R**	To fit hole size 3/4" - 19.0mm	
	122.189	**A/R**	To fit hole size 7/8" - 22.2mm	
	122.026	**A/R**	To fit hole size 1"	- 25.4mm
	CABLE PASS GROMMETS			
27	**122.003**	**A/R**	To fit panel hole 3/8" -	9.5mm
	122.014	**A/R**	To fit panel hole 1/2" - 12.7mm	
	122.005	**A/R**	To fit panel pole 5/8" - 15.8mm	
	122.205	**A/R**	To fit panel hole 1"	- 25.4mm
	122.002	**A/R**	To fit panel hole 1" made from red rubber	- 25.4mm

© Van Gestel C&B 1997

Hoods & tonneau covers

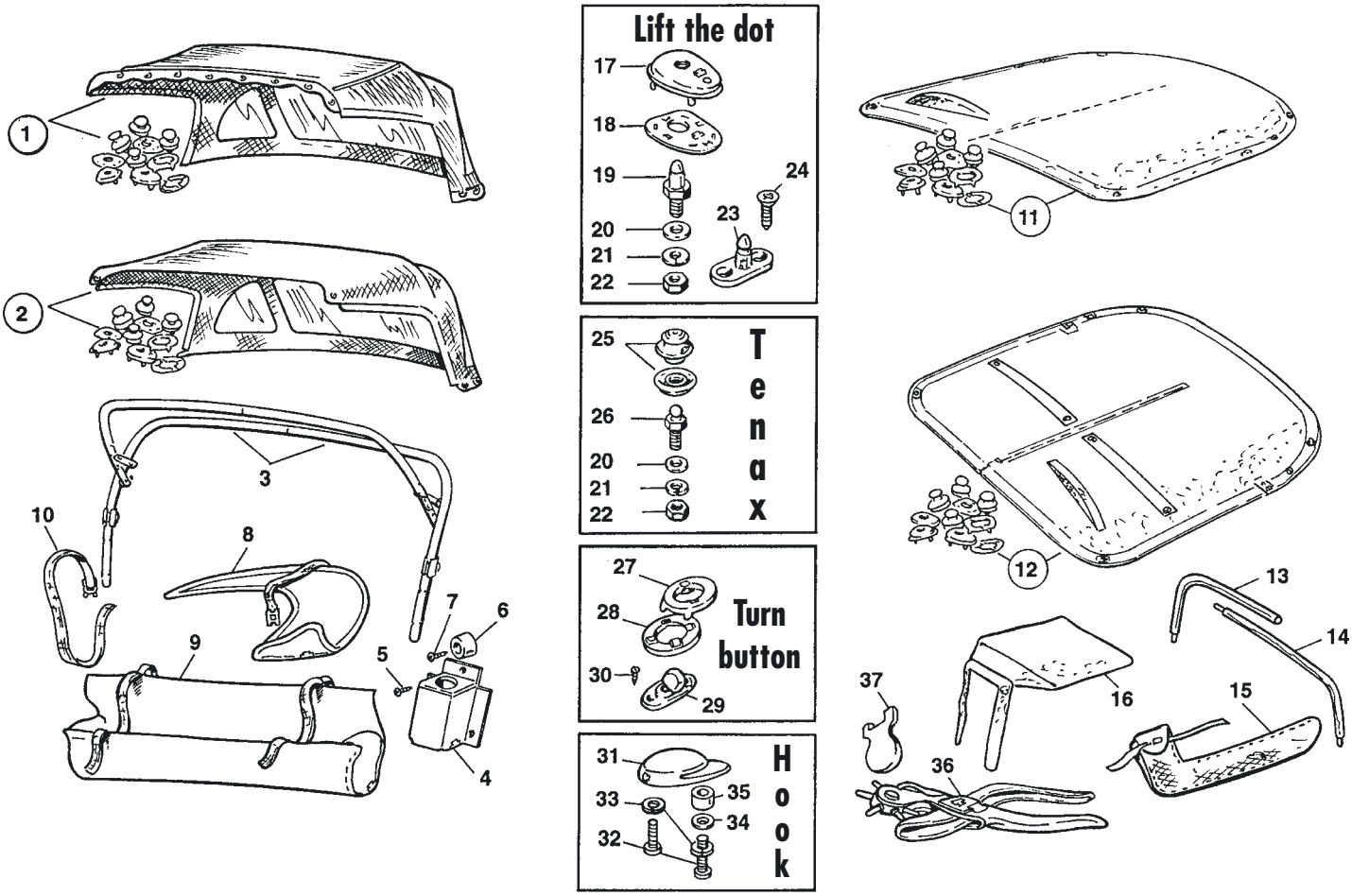

ILL N°	PART N°	QTY	DESCRIPTION	APPLICATION
1	**153.276**	**1**	Hood, Black PVC	Sprite MK1 to 5476
	153.507	**1**	Hood, Black Sun-Fast Cloth	Sprite MK1 to 5476
2	**153.277**	**1**	Hood, Black PVC	Sprite MK1 from 5477
	153.508	**1**	Hood, Black Sun-Fast Cloth	Sprite MK1 from 5477
	153.278	**1**	Hood, Black PVC	Sprite MK2 - Midget MK1
	153.509	**1**	Hood, Black Sun-Fast Cloth	Sprite MK2 - Midget MK1
	153.504	**1**	Hood, Red PVC	Sprite MK2 - Midget MK1
3	**155.014**	**1**	Hood frame	Sprite MK1
	155.015	**1**	Hood frame	Sprite MK2 - Midget MK1
4	**133.474**	**2**	Bracket, hood frame stowage	Sprite MK1
5	**162.138**	**6**	Screw, bracket fixing to rear bulkhead	Sprite MK1
6	**122.046**	**2**	Buffer, rubber	Sprite MK1
7	**162.165**	**2**	Screw, buffer	Sprite MK1
8	**150.295**	**1**	Bag for hood frame	Sprite MK2 - Midget MK1
9	**150.294**	**1**	Bag for hood	Sprite MK2 - Midget MK1
10	**159.044**	**1**	Stowage strap	Sprite MK2 - Midget MK1
11	**153.284**	**1**	LHD Tonneau cover Black PVC	Sprite MK1
	153.510	**1**	LHD Tonneau cover Black Sun-Fast Cloth	Sprite MK1
	153.505	**1**	RHD Tonneau cover Black PVC	Sprite MK1
12	**153.285**	**1**	LHD Tonneau cover Black PVC	Sprite MK2 - Midget MK1
	153.511	**1**	LHD Tonneau cover Black Sun-Fast Cloth	Sprite MK2 - Midget MK1
	153.487	**1**	RHD Tonneau cover Black PVC	Sprite MK2 - Midget MK1
13	**155.016**	**1**	RH Tonneau support rail	Sprite MK2 - Midget MK1
14	**155.017**	**1**	LH Tonneau support rail	Sprite MK2 - Midget MK1
15	**153.030**	**1**	Bag for tonneau rails	Sprite MK2 - Midget MK1
16	**150.296**	**1**	Bag for tonneau cover	all
17	**152.030**	**A/R**	Lift the dot fastener	
18	**152.031**	**A/R**	Back plate	
19	**152.002**	**A/R**	Peg for lift the dot	
20	**168.052**	**A/R**	Leather washer	
	163.013	**A/R**	Washer, plain	
21	**164.015**	**A/R**	Washer, spring	
22	**161.024**	**A/R**	Nut	
23	**152.009**	**4**	Peg on base plate	Sprite MK2 - Midget MK1
24	**162.102**	**8**	Screw	Sprite MK2 - Midget MK1
25	**152.078**	**4**	TENAX Fastener	
26	**152.125**	**4**	TENAX Peg	
27	**152.027**	**2**	Eyelet, turn button	
28	**152.028**	**2**	Back plate, turn button	
29	**152.029**	**2**	Turn button	
30	**162.102**	**4**	Screw	
31	**152.005**	**2**	Hook, hood retaining	
32	**162.063**	**4**	Screw	
33	**164.015**	**4**	Washer, spring	
34	**163.013**	**4**	Washer, plain	
35	**133.925**	**2**	Collar, spacer	
36	**200.419**	**1**	Revolving punch pliers	
37	**152.139**	**1**	Key for TENAX fastener	

INFO : All our hoods and tonneau covers are cut from painstakingly crafted patterns.Original factory designs are followed and improved upon when necessary.All seams are stitched with Dacron thread and Dielectrical Heatsealed for superior strenght.All fasteners are supplied with the hoods or tonneau covers but are not yet fixed.Fasteners to go on the car are NOT supplied with our hoods or tonneau covers.

SUN-FAST CLOTH MATERIAL is 100% acrylic Glen Raven surface cloth laminated with a superior rubber formulation to a pre-shrunk cotton backing cloth.The material is soft, supple and has almost a zero % stretch caracteristics to insure that hoods do not sag, billow or lose their shape over time.Products ordered in Sun-Fast Cloth will offer a rich appearance and many years of service if cared for properly.

© Van Gestel C&B 1997

Seat covers, frames & fittings

Sprite MK I - II 948 cc 04-'58 to 09-'62

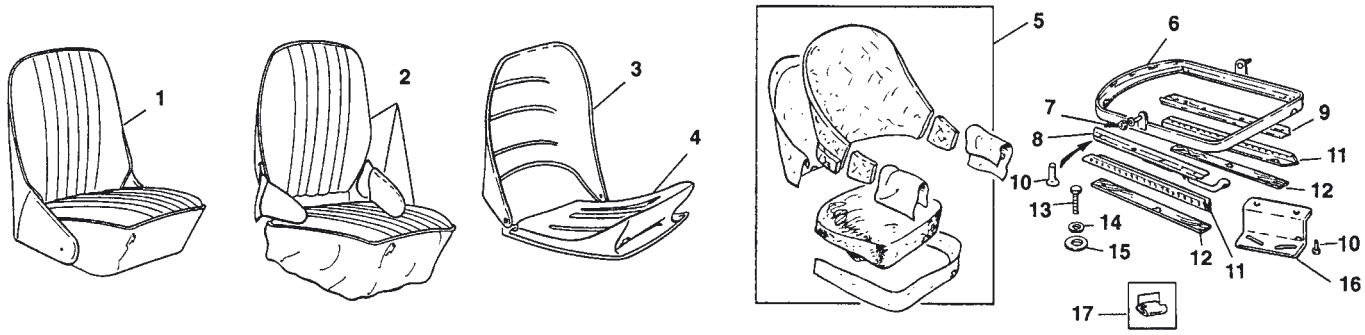

Midget MK I 948 cc 02-'61 to 09-'62

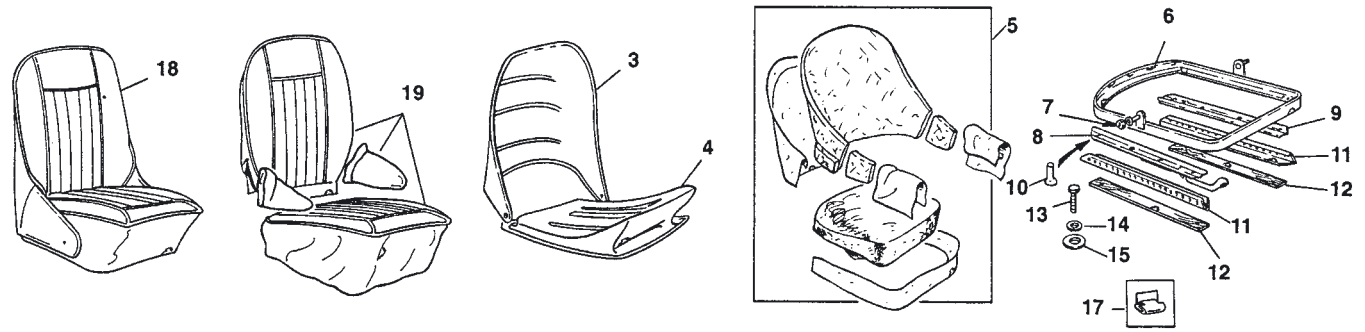

Sprite MK II - Midget MK I 948 cc 09-'62 to 01-'64

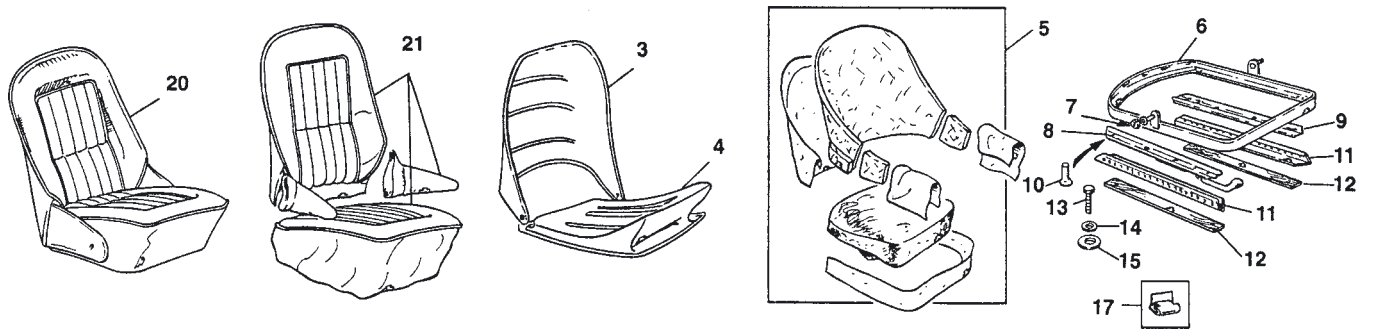

ILL N°	PART N°	QTY	DESCRIPTION	APPLICATION
1	.....	1	Pair seats, Made to special order only.	Sprite MK1-2 948cc
2	156.173	1	Pair seat covers, 2 seats Black with white piping	Sprite MK1-2 948cc
	156.174	1	Pair seat covers, 2 seats Red with white piping	Sprite MK1-2 948cc
3	136.046	2	Seat back, metal	
4	136.045	2	Seat base, metal	
5	157.056	2	Seat foam and padding kit. This kit contains all necessary horse hair pads, felt, base foam and base foam wrap to upholster ONE seat.	
6	136.044	2	Seat base frame	
7	161.012	4	Nut, squab to frame	
	163.008	4	Washer, plain	
8	134.338	1	LH Seat catch LHD cars	Sprite MK1-2 948cc
	134.338	1	LH Seat catch	Sprite 1098cc & Midget
	134.337	1	RH Seat catch RHD cars	Sprite MK1-2 948cc
	134.337	1	RH Seat catch	Sprite 1098cc & Midget
9	134.340	1	Seat runner	Sprite MK1-2 948cc
	134.340	2	Seat runner	Sprite 1098cc & Midget
10	162.125	16	Screw, seat fixing	
	164.012	16	Washer, spring	
	161.019	16	Nut	
11	134.321	2	Floor runner	Sprite MK1-2 948cc
	134.321	4	Floor runner	Sprite 1098cc & Midget
12	134.494	4	Packing strip, wood	Sprite MK1-2 948cc
	134.494	4	Packing strip, wood	Sprite 1098cc & Midget
13	162.522	8	Floor screw	
14	164.012	8	Washer, spring	
15	163.010	8	Washer, plain	
16	135.792	4	Bracket, passenger seat	Sprite MK1-2 948cc
17	172.170	12	Clip, seat squab	
	172.016	20	Clip, seat squab	
	172.170	44	Clip, seat cushion	
18	.....	1	Pair seats, Made to special order	Midget MK1 948cc
19	156.303	1	Pair seat covers, 2 seats Black with white piping	Midget MK1 948cc
	156.304	1	Pair seat covers, 2 seats Red with white piping	Midget MK1 948cc
20	.....	1	Pair seats, Made to special order	Sprite MK2 1098cc Midget MK1 1098cc
21	156.126	1	Pair seat covers, 2 seats Black with white piping	Sprite MK2 1098cc Midget MK1 1098cc
	156.127	1	Pair seat covers, 2 seats Red with white piping	Sprite MK2 1098cc Midget MK1 1098cc

© Van Gestel C&B 1997

Panel kits & carpet sets

Sprite MK I panel kit

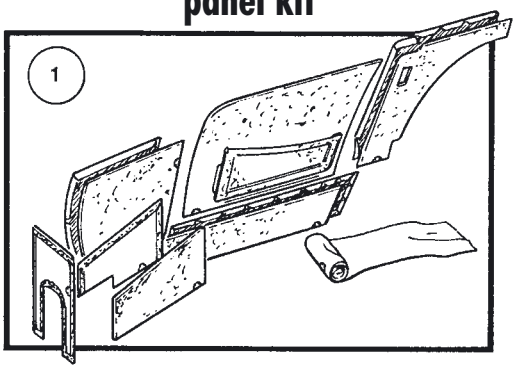

Sprite MK II - Midget MK I panel kit

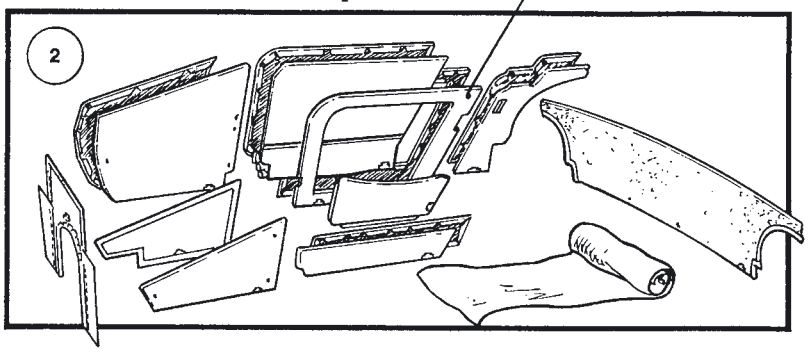

Sprite MK I carpet set

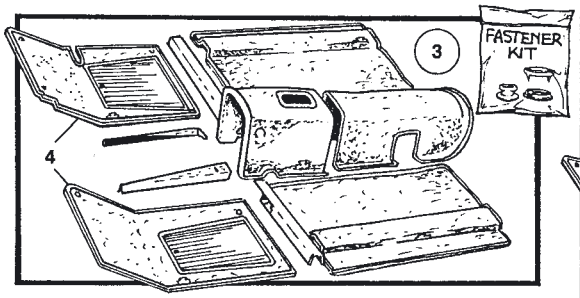

Sprite MK II - Midget MK I carpet set

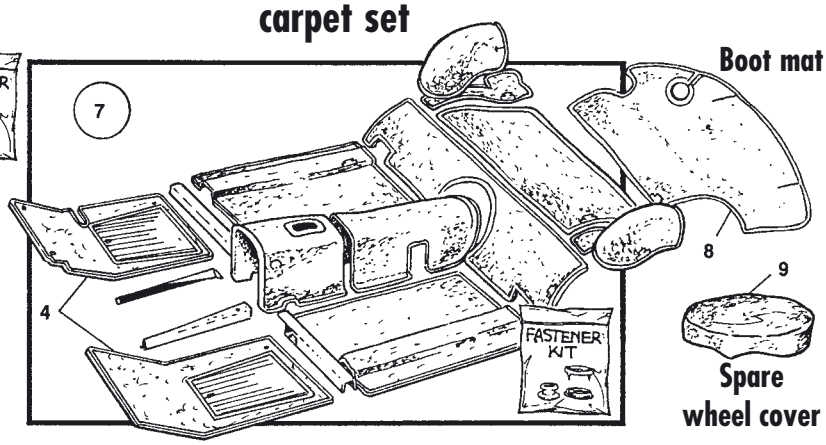

Sprite MK I boot mat set

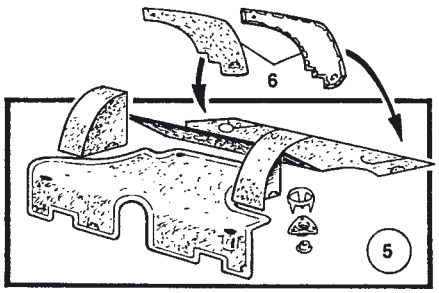

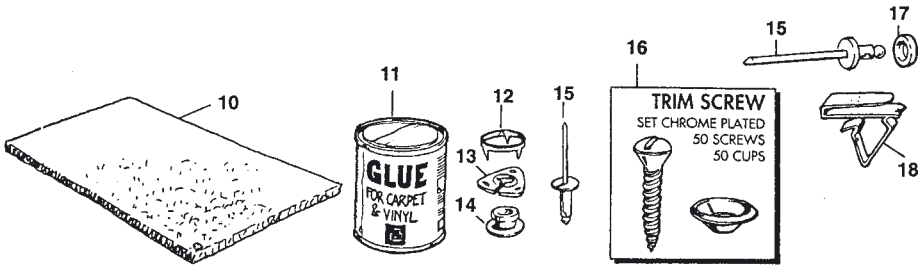

ILL N°	PART N°	QTY	DESCRIPTION	APPLICATION
1	**151.378**	**1**	Panel kit, Black incl. dash cover vinyl	Sprite MK1 04/'58 - 02/'61
	151.379	**1**	Panel kit, Red incl. dash cover vinyl	Sprite MK1 04/'58 - 02/'61
2	**151.285**	**1**	Panel kit, Black incl. dash cover vinyl	Sprite MK2 - Midget MK1 948cc drum brake model
	151.286	**1**	Panel kit, Cherry red incl. dash cover vinyl	Sprite MK2 - Midget MK1 948cc drum brake model
	151.287	**1**	Panel kit, Black Incl. dash and rail cover 1098cc disc brake model vinyl and door panels.	Sprite MK2 - Midget MK1
	151.288	**1**	Panel kit, Red Incl. dash and rail cover vinyl and door panels.	Sprite MK2 - Midget MK1
3	**151.296**	**1**	Carpet set, Black	Sprite MK1
	151.297	**1**	Carpet set, Red	Sprite MK1
4	**151.300**	**1**	Pair foor mats, Black	
	151.301	**1**	Pair foot mats, Red	
5	**151.416**	**1**	Boot liner set, Black made from hardura material	Sprite MK1
	151.596	**1**	Boot liner set, Red made from hardura material	Sprite MK1

ILL N°	PART N°	QTY	DESCRIPTION	APPLICATION
6	**159.050**	**1**	Pair boot side panels 2 boards, grey colour	Sprite MK1
7	**151.676**	**1**	Carpet set, Black	Sprite MK2 - Midget MK1
	151.677	**1**	Carpet set, Red	Sprite MK2 - Midget MK1
8	**151.686**	**1**	Boot mat, Black not incl. in carpet set	Sprite MK2 - Midget MK1
	151.687	**1**	Boot mat, Red not incl. in carpet set	Sprite MK2 - Midget MK1
9	**151.684**	**1**	13" Black spare wheel cover	
	151.685	**1**	13" Red spare wheel cover	
10	**151.097**	**A/R**	1 Square meter insulation felt	
	151.122	**A/R**	1 Square meter black carpet	
	151.123	**A/R**	1 Square meter red carpet	
11	**187.009**	**2**	Glue for carpet & vinyl	
12	**152.152**	**A/R**	Ring for carpet fastener	
13	**152.153**	**A/R**	Catch, carpet fastener	
14	**152.035**	**A/R**	Stud, carpet fastener	
15	**172.372**	**A/R**	Rivet	
16	**162.817**	**2**	Trim screw & cup washer set	
17	**163.052**	**10**	Cup washer, back board	
18	**172.213**	**20**	Clip, door panel disc brake model cars only.	

© Van Gestel C&B 1997

Alloy rocker covers

High quality tooled and polished alluminium rocker cover. These covers come without a breather pipe. The crankcase breather needs to be retouted to your air cleaner.

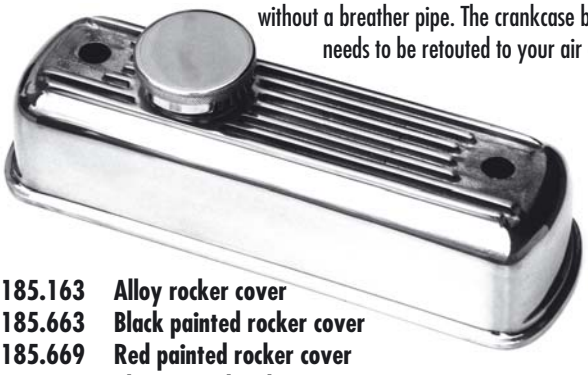

185.163 Alloy rocker cover
185.663 Black painted rocker cover
185.669 Red painted rocker cover
185.670 Blue painted rocker cover

016.168 Gasket

This gasket made from cork is for rocker cover 185.163

141.641
Pair knurler rocker cover nuts
chrome plated

185.104 Chrome filler cap
185.672 Red filler cap
185.673 Yellow filler cap

013.543 Fast Road KENT kit

Includes: High performance camshaft, 8 cam followers, double valve spring set, spring retainers, cam lub. and timing disc with fitting instructions.
(for pin oil pump drive)
Specifications: power brand = 2000-6000 • cam lift = 6.70 mm
valve lift = 9.08 mm • duration = 286° • timing = 37/69 69/37
inlet timing = 106° • valve clearance = 0.40 mm

012.395
Retaining nut
chrome plated
(order 2 pieces)

012.257
Washer
chrome plated
(order 2 pieces)

012.003
sealing bush
rubber (order 2 pieces)

013.533 'Kent' adjustable cam sprocket

Install an adjustable double chain sprocket kit from Kent and overcome the problem of stretched single timing chains & worn sprocket wheels. High performance engines need razor sharp timing, the adjustable sprocket will help you to achieve this.

013.534 Drive belt kit

Drive belt kit with adjustable sprocket for highly tuned engines. Helps to reduce noises and power loss caused by stretching chains and worn-out sprockets.

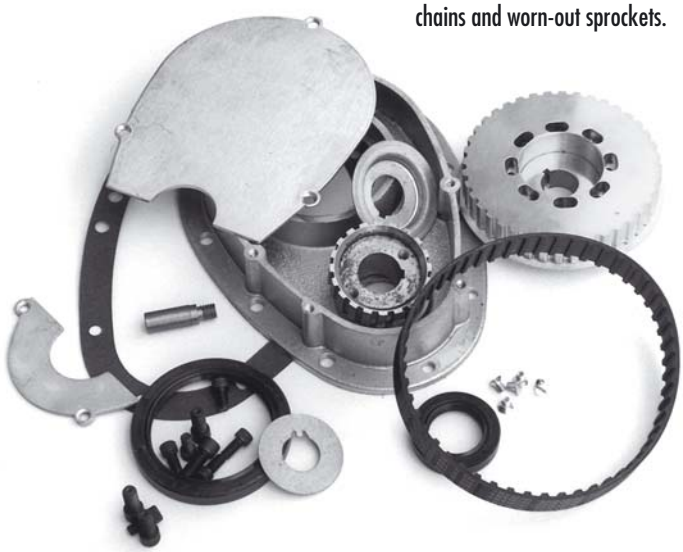

© Van Gestel C&B 1997

Complete engines and ignition improvement

012.665
Reduce valve guide wear
Reduce valve guide wear by the rolling action of the tip of the rocker over the valve stem. Because the run on roller bearings, friction in the engine is reduced.

012.263
Sleeve blanking
when thermostat is not fitted

Rebuilt cylinderheads

All tested and converted for lead free petrol. Available: standard specifications or completely modified for fast road or rally specifications.
Read more about them on page 12.

NGK Spark plugs for a better performance
The higher NGK number, the cooler the plug runs.

012.389	NGK BP5ES	stand. spec. most 948cc eng.
012.355	NGK BP6ES	stand. spec. most 1098-1275cc eng.
012.354	NGK BP7ES	colder plug for stage 2 & 3 eng.
012.680	NGK BP8ES	cold plug forhighly tuned engines.

081.195
Coil, Sport type
push - on

Competition H.T. Lead kit
081.480 NGK
for 45D distributor
081.582 Lucas
for 45D distributor

081.581
Lucas 45D Competition Distributor
Brand new with modified advance curve for higher RPM and without vacuum advance. For easy access and all RHD cars add the side entry caps as illustrated below.

081.299
Side entry cap for 45D ditributor
Will need fixing modification

081.579
Front/rear side entry cap for 45D distributor
Will need a small fixing modification

Lumenition Optronic Ignition

HOW IT WORKS

Lumenition Optronic Ignition is an electronic ignition conversion principally for cars origially fitted with mechanical distributors using contact points. The advantage of the Lumenition system is that it contains no wearing parts, requires no adjustment or maintenance during service and once ignition timing is set it will remain permanently tuned. The engine will start better, last longer and run more economically through improved efficiency. There are only three components, very compact and simple to fit.

ill. 1 **086.081** Fitting kit for 25D Lucas distributor
086.083 Fitting kit for 45D Lucas distributor will suit our competition distributor
ill. 2 **086.082** Optronic power supply module Originaly for neg. earthed cars, please ask for wiring info. when car remains positive earthed.

1

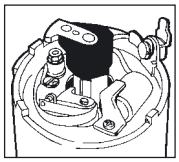

System with mechanical distributor & contact points.

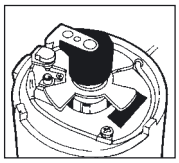

Lumenition, no wearing parts & always perfect ignition timing.

2

190.207
Tuning BL's 'A' series engines
By David Vizard
Get the maximum out of you engine. Just follow the recommendations according to your requirements. David Vizard also tell's you about the correct background information for each modification. Excellent writing and over 600 illustrations. 436 pages. A very usefull book.

© Van Gestel C&B 1997

Fuel system improvement

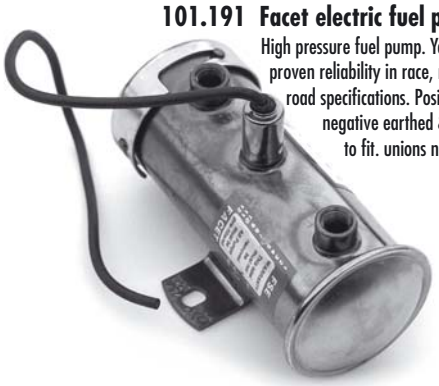

101.191 Facet electric fuel pump
High pressure fuel pump. Years of proven reliability in race, rally & road specifications. Positive or negative earthed & easy to fit. unions not incl.

101.192 Unions
Pair of 90° unions for facet pump.

101.819 Fuel pressure regulator
This adjustable fuel pressure regulator eliminates high-end power fade. The fully adjustable dial settings ensure proper metering of fuel for consistent low or high-end power. Comes complete with uninons, two hoses and clips.

172.051
Clip for braided fuel hoses

102.096
'T' piece
'T' piece for fuel hoses

Flexible fuel hoses

102.095	6	cm length
101.325	17	cm length
101.384	19	cm length
101.326	25	cm length
101.327	30	cm length
101.328	35	cm length
101.047	38	cm length

101.821
In-line fuel filter
It is important that your fuel is filtered properly. This chrome plated fuel filter, complete with unions, hoses and installation clips will do the job right.

101.058
Chrome plated fuel cap & lock

101.851
Aston quick release filler cap conversion kit
Complete conversion kit to install the period style Aston filler cap.
This filler cap is very popular on race & rally cars. This cap remains on the car and opens in only a second. The opening is slightly larger for quicker filling. The complete kit contains: Ventes quick release Aston filler cap made from polished alluminium, collar and hose connector, 50 cm of fuelresistant hose (2.1/4" ID) and all clamps and fasteners.

101.346
Aston filler cap with lock
clamps direct to existing fuel filler pipe.

101.936
3.1/2 Aston filler cap & base piece
This beautiful large size quick release filler cap is made for race, rally or modified fast road cars. The filler neck is a cone and will take various diameter hoses to suit most cars. Made from polished aluminium.

198.042
Millers VSP PLus, lead substitute
e only lead substitute for use in unleaded petrol that is endorsed by FBHVC and is also an octane booster.

© Van Gestel C&B 1997

Weber carburettors & fittings

106.069 Short alloy inlet manifold
This short (9 cm) manifold allows enough clearance to fit the air filter without any body modifications.

106.067
Rampipe
to be used with the K&N air filter

106.005 Linkage kit, for accelerator cable
(might be different from illustration)

106.070
WEBER 40 DCOE
Carburettor assembly

For Fast Road specifications. For maximim power, we recommend that you set up the Weber to your & your engine's specific requirements. Have it doneby a professional or read the following books (see books below)

106.066
Gasket, sealing ring on plate (order 2)

106.003
Grommet, vibration (order 4)

106.004
Cup washer (order 8)

101.422 Breather hose adaptor
for connecting the breather hose into the filter backplate.

101.441 K&N Air filter assembly
OFF - SET 63 mm thick
to be used with ram pipes 106.067 x 2

101.576
K&N Air filter element
63mm height

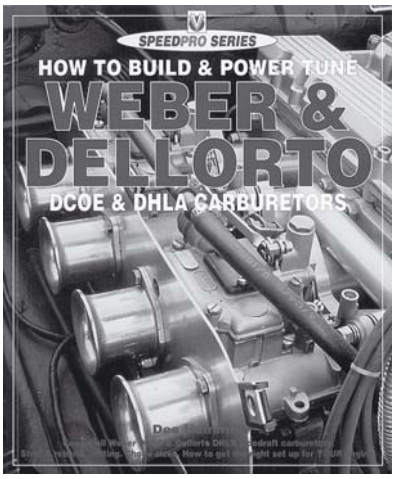

190.416 Speedpro series, Weber & Dellorto
DCOE & DHLA Carburettors, the sidedraftcarburettors.
How to build, power tune, strip and rebuild.
How to get the right set up for your engine.

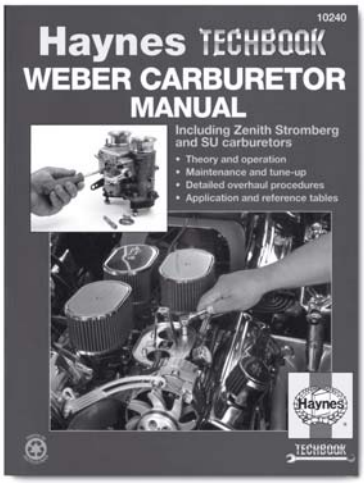

186.042
Special oil spray
for K&N filter element

186.043
1 liter Cleaner
for the filter element

190.428 Haynes carburettor worshop manual
This manual covers Weber, Stromberg & SU carburettors.
Many illustrations and excellent step by step explainations.

© Van Gestel C&B 1997

SU carburettors - competition

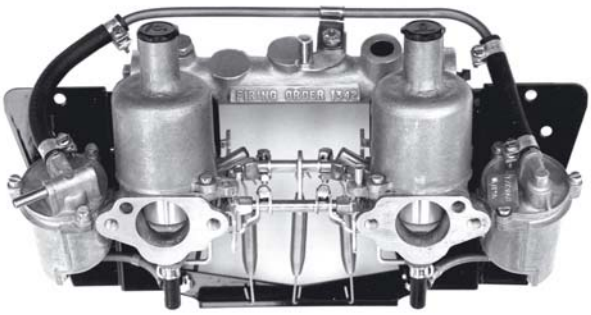

HS Carburettors kit
Comes complete with interconnecting linkages, inlet manifold, heatshield and fuel lines.
102.444 HS2 1.1/4″ carburettor kit • **102.876** HS4 1.1/2″ carburettor kit

Cast alloy inlet manifolds
(different from illustration)
101.388 for HS2 1.1/4″ carburettors
101.389 for HS4 1.1/2″ carburettors

Heatshield
101.392 for HS2 carburettors
101.393 for HS4 carburettors

K&N Airfilters*
(order 2 pieces)
185.020 for HS2 or 1.1/4″
101.038 for HS4 or 1.1/2″

101.102
K&N replacement element*

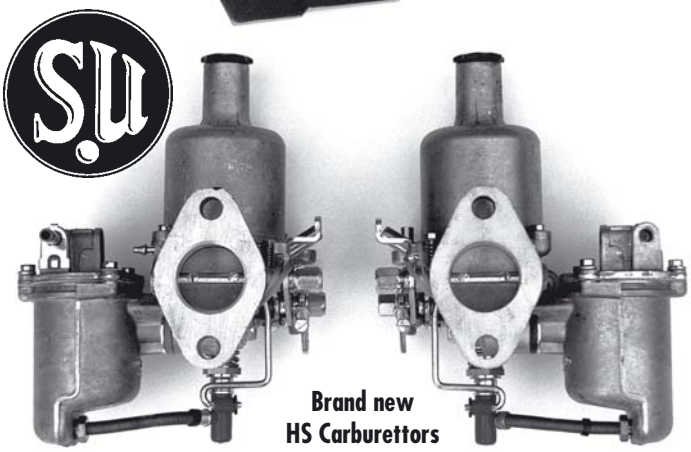

Brand new HS Carburettors
102.441 HS2 1.1/4″ carburettors • **102.442** HS4 1.1/2″ carburettors

101.574
K&N Filter element*
for tapered filters
(order 2 pieces)

K&N tapered airfilters*
101.638 for HS2 1.1/4″
101.331 for HS4 1.1/2″

Rampipes improve aiflow
Specially designed to fit into the K&N high performance air filters. Best to order with the air filters. (order 2 pieces)
101.580 will suit 1.1/4″ HS2 carb.
101.230 will suit 1.1/2″ HS4 carb.

186.042
Special oil spray
for K&N filter element

186.043
Cleaner
for the filter element

101.422
Breather hose adaptor
for connecting the breather hose into the filter backplate.

330.070
Damper oil 125ml
This is the right oil for your SU

200.572
Carburettor synchroniser

Carburettor dashpots **(order 2 pieces)**
185.370 for 1.1/4″ red anodised
185.371 for 1.1/4″ blue anodised
185.048 for 1.1/4″ polished alloy

185.372 for 1.1/2″ red anodised
185.373 for 1.1/2″ blue anodised
185.016 for 1.1/2″ polished alloy

190.225
SU carburettors, tuning tips & techniques by G.R. Wade
Most mechanics and enthusiasts struggle with setting the twin SU carburettors correctly. This book and a bit of practice will solve the problem. It is very important for your engine that the carburettor tuning is correct. This book also covers all SU fuel pumps.
189 pages.

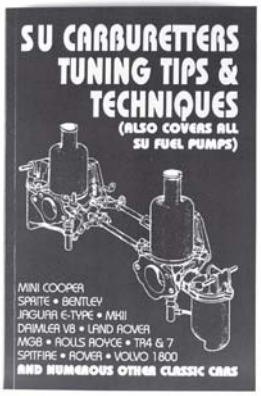

***When standard air filters are changed to K&N, you will improve the flow, we recommend that you also change carburettor fuel needles.**

© Van Gestel C&B 1997

Engine improvements

185.129
KENLOW
electric fan kit
Protect your engine from running hot ! Fit a Kenlow electric fan kit with an adjustable thermo switch

011.156 Spin - on conversion kit
Makes oil changing easy & clean.

011.131
Spin-on Oil Filter
with relief valve

Get your oil temperature under control !
Stainless steel braided hoses and a thermostat gives you faster warm-ups and better cooling when hot. No worries about the engine being too cold or too hot. The thermostat connections are professional screw-on fittings

071.031
4 stainless steel hoses & thermostat

185.121
Oil cooler fitting kit, economic
High quality hoses, correct fitting ends and length make this kit the easy way to install an oil cooler.
Use an oil cooler shroud in winter or on cold mornings
185.440

Oil cooler
060.016 10 row, for standard road specifications
060.003 13 row, for modified engines, fast road or rally use

185.440 Oil cooler shroud
Engine oil protects better within a given temperature range, and an oil cooler makes sure this is maintained in the summer. In the winter this same cooler can cause undercooling. This easily mounted shroud makes sure this doesn't happen in the winter.
Put it on in Autumn and take it of in Spring. takes a few seconds to install.

Alloy engine backplate
The metal backplate is far too heavy and swapping over to a alloy plate is one of the most coomen changes to reduce weight. You will need to change the oil pump cover from one plate to the other.
011.773 Alloy plate for 1098cc engines
011.774 Alloy plate for 1275cc engines

Oil seal kit - crankshaft
This oil seal kit puts an end to oil leaks at the rear of the crankshaft. Oil leaks can damage the clutch plate wich results in pulling out the engine and frequently changing the plate. Each kit comes complete with an oil seal mounting plate, a modern type oil seal and all fixing hardware.
011.770 948cc oil seal kit / 1098cc oil seal kit (not 10cc eng. nr.)
011.771 1098cc oil seal kit (10cc eng. nr.)
011.772 1275cc oil seal kit **016.513** spare oil seal only

024.302 Front plate & oil seal
Improved front plate for **Rib case** gearbox. This front plate is made from alloy, extra strong and includes a modern type oil seal. Play safe and change the plate in only a few minutes before bolting it back to your engine.

011.776 4 way steady bar kit
Made from solid brackets and twin rose jointed steady bars. Prevents the engine from side, front & rear movement. Very usefull in avoiding the engine going thru the radiator when braking hard or unexpectedly. Side movement can damage the engine mountings and very often even the air filters and exhaust system.

011.775 2 way steady bar kit
Made from solid brackets and a rose jointed steady bar. Prevent the engine from side movement. Side movement will cause broken engine mountings.

© Van Gestel C&B 1997

Front suspension - improvements

042.398
Coil spring

Front coil spring, 400 lb and 7,3/4". The best there is for fast road and rally cars. We do not recommend to go any lower or stiffer except for racing. Sold individually

Nylatron block kit

This kit contains two nylatron anti-roll bar blocks. Different diameters are available to suit your anti-roll bars.
Anti-roll bars are shown on page 23 & 33 in this catalogue.

041.655	5/8"	block kit
041.656	11/16"	block kit
041.657	3/4"	block kit

042.726 Rose jointed link kit

Rose jointed anti-roll bar links. Very much an improvement from the standard rubber jointed links.
Sold per pair

041.613
Nylatron wishbone bush kit

041.652
Negative camber trunnion kit

Fit a negative camber kit for instant satisfaction. It is hard to believe, but this small modification improves handeling enormously. Set sold for one car

041.650
30% uprated valves

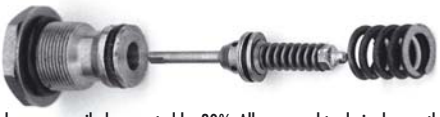

Original Armstrong shock absorbers can easily be uprated by 30%. All you need to do is change the valve, refill the shock absorber and bleed the unit by placing the shock absorber upright and pumping the arm a few times. The air will mount into the air chamber. Only use these valves with new shock absorbers. Placing them on worn out units will not lead to improvements.

042.729 'Frontline' front suspension kit for two sides

The 'Frontline' front suspension kit is a bolt-on modification that requires no structual changes to the car and comes with instructions and everything necessary for fitting two sides.
Most important changes are: two degree negative cambers, steadier ride, improved braking (less twisting effect), a more positive driving response and specially developed KONI shock absorbers.

Shock absorber oil for Armstrong lever arm shock absorbers

330.001
1/2 L. for normal use and for shock absorbers having the 30% uprated valves
330.002
1/2 L. for rally & race work only. This oil is slightly thicker. Do not use this oil in combination with 30% uprated valves.

© Van Gestel C&B 1997

Rear suspension - improvements

042.723 Lowered rear spring

The rear end isn't very heavy and therefor we recommend a slightly softened and lowered rear spring in combination with a Rose-jointed radius arm or at least improve the existing radius arms by putting our Nylatron bushes in order to steady the rear axle.
allways order two

042.728 Panhard rod kit

It is the leaf spring which supports the axle and provides control on sideways movement of the body in relationto the wheels. The solution to this weakness is the Panhard rod. This kit is to be used with Armstrong shock absorbers. No welding is required to install this kit. Comes complete with fitting instructions.

041.651 Nylatron radius arm bush kit

042.727 Pair of Rose-jointed radius arm

Shock absorber oil for Armstrong lever arm shock absorbers

330.001
1/2 L. for normal use and for shock absorbers having the 30% uprated valves

330.002
1/2 L. for rally & race work only. This oil is slightly thicker. Do not use this oil in combination with 30% uprated valves.

041.658 30% uprated valves

Original Armstrong shock absorbers can easily be uprated by 30%. All you need to do is change the valve, refill the shock absorber and bleed the unit by placing the shock absorber upright and pumping the arm a few times. The air will mount into the air chamber.
Only use these valves with new shock absorbers. Placing them on worn out units will not lead to improvements.

042.375 'Spax' rear conversion kit for 2 sides

The 'Spax' telescopic shock absorber conversion kit with on-car adjustable dampers has been on the market for many years and it has proven it's reliability. The kit comes complete with brackets, bolts & fitting instructions. The shock absorber position is 45°.

042.730 'Frontline' Rear conversion kit for 2 sides

'Frontline' has produced a telescopic shock absorber conversion kit with the shock absorbers installed in a near vertical position, as opposed to the 45° angle that Spax uses. The kit comes complete with fitting instructions, brackets, bolts & two KONI adjustable shock absorbers.

© Van Gestel C&B 1997

9″ Disc brake conversion kit

The 9″ disc is thicker and larger than the standard 8.1/4″, these two factors make the new 9″ disc conversion better for absorbing the heat generated while braking. Pads & calipers are also much larger, which in it's turn improves dispersion. The overall benefit is a 25% increase of braking area. The kit comes with two discs, brake calipers, braided steel brake hoses and all fittings and instructions.
Not included are the brake pads as we offer 2 types; Rally & race or road specifications.

In case your car has front drum brakes, please see page 32-33 and order the stub axles and steering arms aswell.

050.170
9″ for steel wheel models
050.171
9″ for wire wheel models

Brake pad sets

053.009
Brake pad set, standard
053.099
Brake pad set, race & rally

Kit stainless steel braided brake hoses

Improved quality for a good solid feel. Each kit contains two front brake hoses and one rear brake hose.
054.393 Brake hose kit, drum brake models
054.394 Brake hose kit, disc brake models

053.018
1 L. Silicone brake fluid

053.039
1 L. Dot 4 high quality brake fluid

053.177
1 L. Dot 5 high performance brake fluid for race & rally.

052.479
In-line non return valve

011.073
Vacuum adaptor, to be used with an in-line non return valve

011.315
Vacuum adaptor with built-in non return valve

053.082 Lockheed Brake servo

After easy installation you will achieve maximum braking power. WARNING ! fitting a brake servo will not cure faulty brakes, therefor ensure that your braking system is in good working condition.

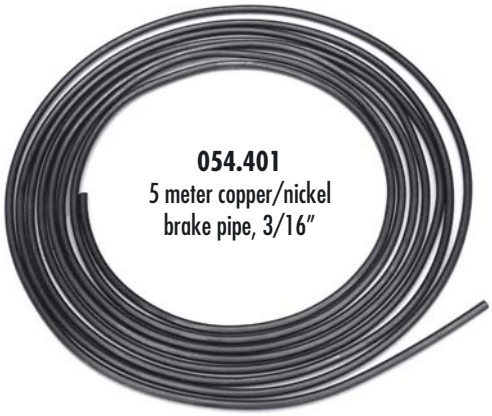

054.401
5 meter copper/nickel brake pipe, 3/16″

135.794
Bracket, servo unit

052.405
Female union, 3/8″ UNF

135.795
Clamp, servo unit

054.105
1 meter servo vacuum hose

052.406
Male union, 3/8″ UNF

© Van Gestel C&B 1997

5 speed gearbox conversion kit

The 5 speed modification kit for Sprites & Midgets is a complete transmission replacement kit which gives modern car performance to your Sprite or Midget at a cost that will more than pay for itself. Results: quicker shifting, quicker acceleration, a higher top gear & higher top speed. There is also no more howling in first and reverse gear and handeling heavy & slow traffic becomes much easier with first gear synchromesh. Once installed, you won't be able to see the difference in the engine bay or the position of the gearshift.

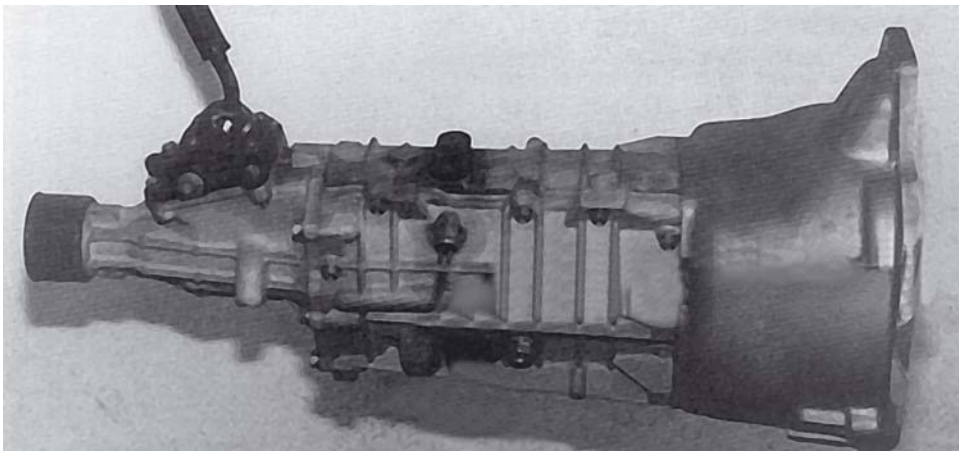

The kit includes: Fully reconditioned gearbox, modified bell housing, new engine back plate, back plate gasket, spigot bush, clutch plate, clutch plate cover, clutch release bearing, modified clutch arm, modified clutch slave cylinder, shortend drive shaft, chassis cross member, speedometer cable, clutch pipe, nuts and bolts and good fitting instructions.

Please note that your speedometer will need recalibration after fitting and testing.

Part number for this complete 5 speed transmission kit is 020.103

5 speed gearbox conversion kit

For A series gearbox, rib case type only.

Fitting a close ratio gear set is fairly expensive, we therefor recommend to do a complete rebuild at the same time.

See page 29-31 for more details. **Our part number for this close ratio kit is 024.305**

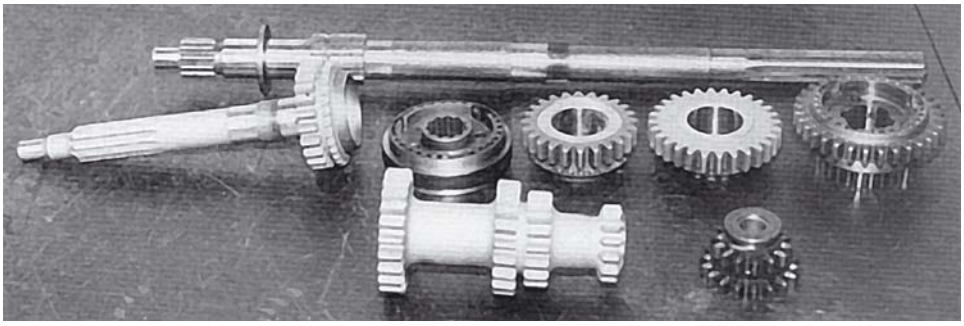

© Van Gestel C&B 1997

Penrite Oils

300.501
5 L Engine Oil 20W/60

300.111
1 l Gear Oil 30"
For gearbox

300.118
1 L HYPOID 85W/140
for rear axle & steering rack

Castrol oils "Classic Range"

300.522
4.5 L Eengine Oil 20W/50

330.092
1/2 L EPX 90
for: gearbox, overdrive, rear axle, and steering rack

052.117
Red Rubber Grease.
Small tin, to be used when fitting brake seals etc.

186.040
Castrol Oil Spray,
all good

186.021
Cartridge Castrol Grease

186.159 CASTROL 4 L Anti-Freeze
all season protection up to -36°

200.591
Force Speed Oil Can, in metal

Loctite

198.016
300ml Spray, Gasket remover.
Removes paper, paint, gasket etc.

016.269
Form -A- Gasket Nr.1, 200ml Gasket
cement, Tube. Use on both sides of the gasket or direct on the surface.

198.017 Form -A- Gasket nr. 1372, 200 ml gasket
cement tube. Use on both sides of a gasket or direct on the surface. Specially for high temperatures up to 315°C. Also usefull for exhaust pipe fitting.

200.749 Castrol oil pourer one quart: 1,14 L.

200.604
Grease Pump

200.590
Metal Oil Pourers 2L.

132.646 OIL DRIP PAN
Is usefull to put under your lawn-mower, British bike r even under your Midget or Sprite (1200 x 640 mm)

© Van Gestel C&B 1997

Brake fluids, greases, glues etc.

053.177
Dot 4 racing brake fluid
1 litre high performance brake fluid for racing and rallying

053.039
DOT 4 brake fluid
1 litre of quality brake fluid that exceeds safety standards

198.038
Brake cleaner
Keep your brakes clean for your own protection

053.018
Silicone brake fluid
1 litre, for extended use.
It is silicone based, it won't absorb water that can cause corrosion.
do not mix with conventional fluids

052.117
Rubber grease
A quality product for greasing all rubber .

186.034
Copper grease
With wire wheels your hubs and spinners get very hot. Normal grease becomes liquid and disapears, causing them to get stuck with risk of dammage. This copper grease withstands these high temperatures and make it easy to remove spinners.

198.036
Castrol cleaner
This great cleaner is perfect for cleaning engines & mechanical parts

330.060
Assembly lube, 40 gr.
Provides the highest protection possible in the first vital seconds of starting a new rebuilt engine.

198.042
Millers VSP PLus, lead substitute
The only lead substitute for use in unleaded petrol that is endorsed by FBHVC and is also an octane booster.

187.010
Glue spray
This strong spray glue can be used for all purposes.

187.009
Glue gel, pot 625 gr.
This very strong all purpose glue is perfect for sticking panels, carpets and other trim parts.

185.041
Castrol handy hand cleaner
The best there is for cleaning hands after working on your car, bike, lawnmower, etc.. Cleans oil, grease, dirt etc. very effectively.

187.011 Tube glue gel
This tube of all purpose glue is perfect for sticking small trim parts.

© Van Gestel C&B 1997

The faster you go, the more protection you need

131.826 Aero roll-over bar

For more protection. Street use only. Fitted with black padded vinyl cover

131.825 Solo roll-over bar

Very attractive and safe protection cage.
Looks very nice & gives perfect protection for the driver. This protection bar is made for left hand drive cars and may not be approved by the FIA for cars after 1960. Please ask your FIA organisation for more details. Supplied as a kit to be welded together at the time of installation.

083.174
Battery switch
with removable key

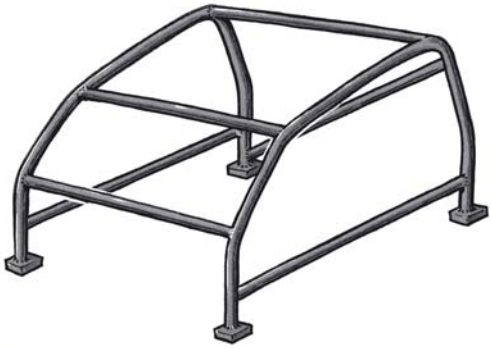

6 point race cage

FIA approved, 6 point cage. For rally and race use. You have full protection with a cross bar at the dash and above your head. The kit consists of seperate tubes and fitting plates and will need to be welded together after fitting in your car. (might be different from illustration.)

Part numbers

131.823	For Sprite MKI
131.824	For Sprite MKII & Midget MKI

158.296 Pair sixties classic rally seats

These authentic style bucket seats are nicely finished in black cloth with black piping. The seat part is detachable. Sold in pairs

136.073
Fairing headrest kit
Neat looking Fairing headrest for Frogeye only. Kit comes with trimmed headrest section, fibreglass Fairing, sealing strip and fixing bolts.

185.178
Safety belt,
3 point, Race & Rally

185.441
Super safe with this 4 point Road & rally safety belt 'E' aproved
Less Eye bolts

185.015
Safety belt
European approved,
3 point with automatic retractor

185.021
Safety belt
European approved
3 point

161.643
Eye bolt
Sold individually

185.009
Pair Leather straps
You will need these to keep your boot or bonnet calm.

185.403
One leather strap
Secure your bonnet or boot during rallying and racing. Sold per piece.

135.787 Anchorage point kit
For fitting an extra safety belt. Comes with the needed bolts, nuts & fitting instructions. Each kit sold for one point. You will need 3 or 4 kits depending on what safety belt you choose.

185.381
Pair Crotch Straps

© Van Gestel C&B 1997

083.815 Retro Trip

The precision distance recorder.
Approved by many historic rallys. Easy calibration in miles & meters.

083.816
Spare Rotor only

086.405 Belmogtwin MK II

Fully mechanic distance recorder.
The perfect trip master for professionals and amateurs. Approved for rallying & racing. With handle to control the counting; forwards, backwards or stop. Special knob to get back on track when a mistake is made, also a knob to temporarily stop recording when leaving the track for the loo etc. After installation the distance recorder will need calibrating to your car's specifications . This can be achieved by testing the distance over 1 km, and noting the difference on the recorder. The recorder must then be returned for fine tuning.

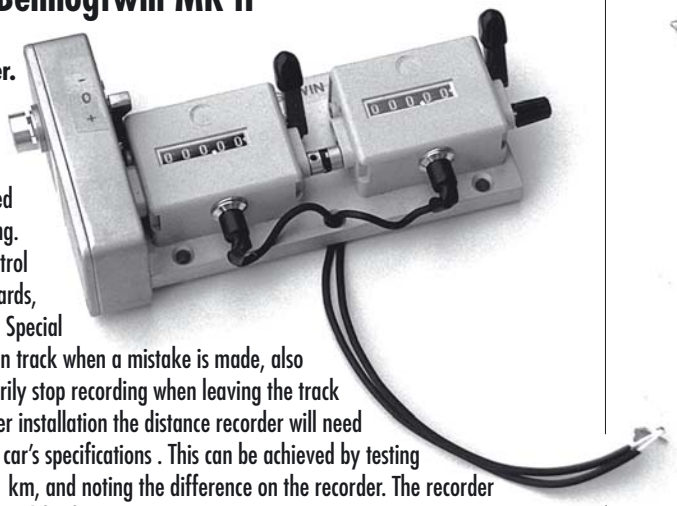

086.406
Minerva "Rally Master" Twin

Minerva is one of the leading Swiss made precision instruments makers in the world.
A 60 minute stop watch with large visible dial and a 12 hour watch. Both are mounted on a solid baseplate. This very accurate beauty is finely finished in chrome.

Warning lights, switches & mounting plates

Two hole/three hole mounting plates

Period reproduction mounting plates
Our mounting plates for warning lights & switches are made from polished stainless steel. The lights & switches are easily installed as the holes are also the sleeves. The holes have a diameter of 1/2", there are also holes in the top for mounting under the dashboard.

135.755
Two hole mounting plate

135.756
Three hole mounting plate

Warning lights

Warning lights available in for colours
These warning lights have been specially chosen to suit British dashboards & fit in our mountng plates. Each light contains a bulb and two lucar terminals (earth & power).

083.159 Green lens
083.477 Red lens
086.187 Amber lens
086.370 Blue lens

084.126
Spare Bulb

Will suit the warning lights illustrated above.
Sold per piece.

083.088
On-Off switch

Original 'Lucas' on-off switch.
Please note to use relays from 50 watts onwards.

083.084
Lighting switch

Original 'Lucas' switch.
Three positions: off, side light & head light

© Van Gestel C&B 1997

Competition lamps, bulbs & protection

185.249
Pair period type headlamp protectors
Gives your lights that extra protection against stones & debry, made from polycarbonate

185.445 Pair invisible light covers
Protects against stones & debry

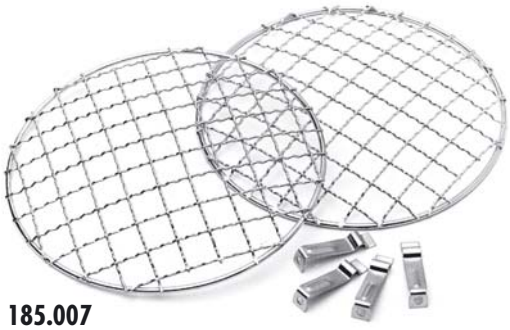

185.007
Pair 7" Stoneguards & fittings

185.337
Fog or spotlamp protection cover.
An exact authorised reproduction of the original Lucas cover.

185.389
Pair 7" Headlamp peak, chrome

084.528
Spot lamp, rally

084.527
Spot lamp, competition

H4 Light units
084.103 LHD H4 Light unit,
084.104 RHD H4 Light ubit,
084.107 LHD H4 + pilot Light unit,
084.108 RHD H4 + pilot Light unit,
(all light units are E11 approved)

084.110
H4 Bulb

084.191
Fog Lamp LUCAS
type "WFT 576"

084.193
Spot lamp LUCAS
type "WLR 576"

084.603
Spot Lamp LUCAS
type "SLR 576"

084.604
Fog Lamp LUCAS
type "SFT 576"

084.261
Rear Fog lamp
Chrome version
'E' APPROVED

© Van Gestel C&B 1997

Instruments

086.171
Water temperature gauge
mechanical in C°

083.147
Dual oil & water temperature gauge
mechanical

086.168
Oil pressure gauge
mechanical

086.169
Electric clock

086.172
Oil pressure hose in PVC

086.326
Oil temperature gauge
mechanical in C°

086.170
Ammeter +60 > -60

083.002
Copper oil pressure pipe

086.399
Voltmeter

135.720
Double 2" gauge bracket
in black wrinkle finish

168.052
Leather washer
oil pressure pipe
to instrument

122.206
Special grommet
oil pressure pipe

172.020
Clip, oil pressure pipe

083.001
Coupling piece 2 - Way

011.563
Adaptor for pressure hose & switch.
Will fit in the engine

083.562
Connector 3 - Way
pipe and switch

061.068
Oil temperature gauge adaptor
To be welded into the oil sump

135.719
Single 2" gauge bracket
in black wrinkle finish

© Van Gestel C&B 1997

086.268
Lucas hazard flasher kit

A universal flasher kit for all cars without an existing device.
The kit includes the switch, relay, mounting bracket, cover and fitting instructions with detailed diagrams. Switch will also fit in a 15 mm diameter hole, as long as the panel is 1,5 mm or less.

185.410
Electric radio antenna

Fully automatic antenna that responds to the radio being turned on or off.
No more pulling out or pushing in the radio antenna for protection against vandalism, car covers, car-wash etc. Requires 34 cm of depth to mount.

086.341
Polarity converter

For your radio-cassette player, CD etc.
Will allow you to connect negative earthed gauges in your positive earthed car.

084.597
Map reading light

Permanently mounted stylish chrome plated map light.
This lamp is for mounting on the dashboard and switches on and off by turning the lamp shade. To be connected to the existing wiring.

086.277
Windscreen washer kit

Contents: Water bottle with 'Tudor' printed on, bottle cap, bracket painted in 'Tudor' blue, washer pump, 'T' piece, non return valve, clear hoses in 2 diameters and 2 chrome plated washer jets and nuts.

084.616 Third Stoplight

This third stoplight makes stopping extra visible for people driving behind you. For tonneau panel or boot lid.

084.601
Map light cigarette

This handy light just plugs in the cigarette lighter socket

© Van Gestel C&B 1997

185.475
Alloy gear knob (flat top)

185.476
Alloy gear knob (round top)

185.025 Wood Moto-Lita steering wheel 33 cm
185.026 Wood Moto-Lita steering wheel 35 cm
185.027 Wood Moto-Lita steering wheel 38 cm

185.155 Leather Moto-Lita steering wheel 33 cm
185.156 Leather Moto-Lita steering wheel 35 cm
185.157 Leather Moto-Lita steering wheel 38 cm

185.252
Walnut, gear lever

Wooden, gear lever
185.034 MG
185.383 AH

Leather, gear lever
185.035 MG
185.384 AH

Number plate in high polished stainless steel
see page 55-58

Moto Lita bosses
185.462 A.H. Sprite MKI-II
185.088 MG Midget MKI

150.389
WING COVER, "Safty Fast MG"
Padded vinyl wing cover, specialy made to fit your Midget.

Pair 'MG' mud flaps
Will fit front or rear
185.008 MG
185.491 AH

Small aluminium billet center horn cap
suits Moto-Lita boss
185.392 MG
185.486 AH

185.446 Expandable Cup Holder
This cup holder can be mounted nearly anywhere and adjusts its grip to the size of your cup or can.Can be folded up when not in use.

Large aluminium billet center horn cap
suits Moto-Lita boss
185.393 MG
185.487 AH

185.182 Tailored Cotton dust cover will fit Midget
Very nice and a perfect fit. Indoor only

150.448 Sprite MKI • 150.449 Sprite MKII & Midget MKI
deluxe custom made car cover. Made from thick acrilic-cotton fleece. This car cover is very soft inside and elasticated to ensure a perfect fit. Green with yellow piping. Indoor only

Polished stainless steel oversills
131.277 LH Sill
131.276 RH Sill

131.275
Fixing strip for oversill (order 2)

© Van Gestel C&B 1997

Wheels, wheel trim, accessories & Dunlop Classic Tyres

198.003
Superglym chrome polish, 75 gr.

161.476
Cap, nickle plated

185.369
MG Cap, Chrome plated set of 4 pieces
185.379
A.H. Cap, Chrome plated set of 4 pieces

198.031
Instant Tyre Dressing

198.006
Clean Wheels

198.019
Black tyre paint

198.020
White paint pencil

187.012
Silicone spray,
Chrome protector

198.033
8 Polishing cloths

185.050
Cleaning brush

200.702
Tyre pressure gauge, solid brass

047.031
Tyre tube

140.058
Polished stainless steel rims,
set of 4 pieces

046.111
Center lock alloy wheel, 5 x 13"

133.476
Cap, alloy wheel

161.270
Wheel nut

047.070
Wire wheel
protection strip

085.180
'MG' badge

085.181
'AH' badge

See page 43 for more information

046.044
Alloy wheel, 5 x 13"

© Van Gestel C&B 1997

141.659 MG rocker cover nut

Quality polished brass with MG marque stamped in relief. Sold individually

MG polished brass keys

This quality key in solid brass with the MG marque stamped in relief is available again after 30 years. The keys are blanks and can be cut to exact specifications in your local key-shop. Compare your existing key with the 2 cross section illustrations here below

FS
Fits boots, doors, gloveboxes and ignitions **185.471**

AA2
Fits most ignitions from 1970 to 1973 **185.472**

141.660 MG Carburettor damper (pair)

Quality polished brass with MG marque stamped in relief.
Sold in pairs

141.067 Ash tray

Stylish chromed ash-tray, perfect for your classical Midget or Sprite.

135.759 Self-triggering boot lid props

Replace your existing boot lid prop and you'll only need one hand to open and shut them.
These very usefull props make opening and shutting the boot so much easier. As you know, with existing props two hands are needed, making it difficult when your hands are full. Loading & unloading is childsplay. On opening the lid the prop locks, then lift the lid slightly before lowering and the prop releases automatically.

159.066 Arm rest

This handy arm rest makes driving more comfortable, supplies you with extra storage room & has a cup holder.

083.086 Cigarette/cigar lighter

comes complete with aluminium dash ring & wiring.

185.634 1958-'64 Frame cover set

These ribbed aluminium frame cover sets look great and cover an area were carpet normally wears out quickly!

135.767 Boot lid gas strut

This is the ultimate way to open your boot without any effort.
Unlock your boot and let this gas strut do the work. Made from high quality materials and easy bolt-on installation without drilling.

© Van Gestel C&B 1997

Auto Glym

simply outstanding

198.005	480ml car shampoo & conditioner
198.008	Cutting polish for badly damaged paint
198.007	Super resin polish
198.011	Extra gloss protection
198.006	Clean wheels
198.031	Instant tyre dressing
198.009	Bumper care (rubber)
198.012	Glass polish
198.035	Fast glass cleaner (spray)
198.013	Interior shampoo
198.010	Vinyl and rubber care
198.014	Instant tar remover
198.003	Chrome polish, 75 gr.
198.033	8 x polishing cloths

198.032
Auto Glym triple pack

This special Auto Glym Pack contains the most important body care products as an introduction to the quality of Auto Glym.

* Bodywork shampoo & conditioner
* Super resin polish
* Car glass polish

185.351 Car duster

This 100% cotton dusting mop has been specially treated to trap dust. Shake out and it's ready to use again.
DO NOT WASH OUT

185.343
Car wash handshoe

The perfect cloth for washing your classical

185.046
Connolly hide food

don't let leather dry out, use this at least once a year.

198.034
Rain-X

Raindrops just blow off, Keeps windscreen clear, even with wipers turned off. Doesn't smeer of damage.

185.334
Chamois

We offer only the best real natural chamois.
These are specially made for the car industry having larger dimensions than most of them and they are thick and extreamly soft. Approx. 40 x 62 cm. Made in England of course.

185.040
Castrol windscreen

Keeps your windscreen clean, also anti-frost

185.335
The professional wringer

Heavy duty, industrial quality wringer for chamois, towels etc.
Specifications: Rustproof all steel frame, maintainance free rollers and bearings, adjustable pressure over the entire length of the rollers for uniform water removal.
The complete wringer machine has two strong clamps for easy attaching.

© Van Gestel C&B 1997

Drivers accessories

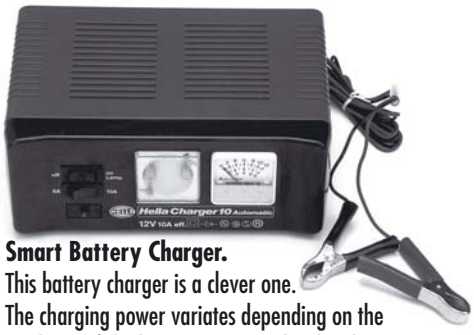

Smart Battery Charger.
This battery charger is a clever one. The charging power variates depending on the condition of the battery. No more bowling batteries with this charger. Once the battery is fully charged, the charger will automaticly stop. You can also keep the charger connected for weeks, without any problem. **Part number 185.330**

Battery filler bottle.
Specialy designed self-closing nozzle for a neat and tidy way of filling your battery without over-filling or spilling.
Part Nr. 200.703

Heavy duty starter cables.
Put this pair of battery cables in the boot and you are always ready to help someone with a dead battery. These cables are 250 cm long and have strong clamps.
Part Nr. 185.333

Battery Switch.
Protection against theft & fire. Mount this switch and you can isolate the battery from the rest of the electrical circuit any time you want. The best security, easy and not expensive.
Part Nr. 083.174

Reflextor-Triangle.
Heavy duty, 'E' approved triangle. In case of any emergency, be seen and put this triangle at least 30 meters in front of the obstacle.
Part Nr. 185.328

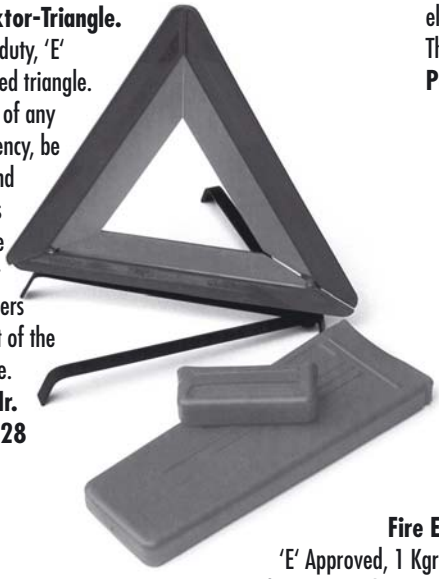

Fire Extinguisher
'E' Approved, 1 Kgr dry chemical fire extinguisher. We hope you will never have to use it, but, just in case, have it with you.
Part Nr. 185.332

First Aid Kit
Official FIRST AID needs. 'E' Approved, comes in a strong plastic box to keep clean when stored.
Part Nr. 185.331

ANTENNA
Chrome plated, 100 cm long and 130 cm cable
Part Nr. 185.326

FOOT PUMP/TYRE PUMP
High performance foot pump, 210 cubic cm air with each press
Part Nr. 185.329

ANTENNA CABLE
200 cm long
Part Nr. 185.327

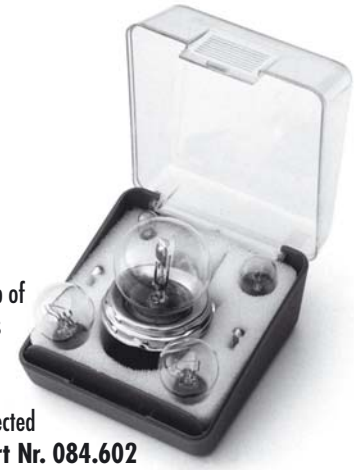

BULB KIT
7 piece spare bulb kit. one bulb of each type is included. This kit is for the standard main headlamps and will not fit H4 types. All lamps are foam protected and come in a handy box **Part Nr. 084.602**

© Van Gestel C&B 1997

Drivers accessories

185.304
Fitted picnic baskets, traditional hand woven willow basket, containing Staffordshire English crockery and made to the highest standard. incl.4 Bromyard blue plates (for 4 people)

185.305 Scarves lambswool, Green Tartan
185.306 Scarves lambswool, Blue Tartan
185.307 Scarves, creamery white

185.061
Goggles, with safety glass

185.301
Adjustable cap with "MG" logo
(this item may be different from illustration)

185.308	Bugatti cap, small
185.310	Bugatti cap, medium
185.312	Bugatti cap, large
185.313	Bugatti cap, extra large

185.314
Picnic Blanket in tartan, fastened to an nylon groundsheet.
(this item may be different from illustration)

185.323
Blanket in Scottish plaid Red lap
185.324
Blanket in Scottish plaid Green lap

185.054	Flying helmet, sheepskin	Small
185.056	Flying helmet, sheepskin	Medium
185.059	Flying helmet, sheepskin	Large

185.076
Umbrella,
"MG" brown & cream

185.255	Flying helmet, fine leather	Small
185.256	Flying helmet, fine leather	Medium
185.257	Flying helmet, fine leather	Large

DENTS GLOVES established in 1777

Today, as in the past, Dents gloves are still handmade in the traditional manner using the finest materials. (made in England)

185.315	Pittards leather palm,Crochet in Cork colour	Small size
185.316	Pittards leather palm,Crochet in Cork colour	Medium size
185.317	Pittards leather palm,Crochet in Cork colour	Large size
185.318	Pittards leather palm,Crocket in Cork colour	X Large size
185.319	Pittards leather	Small size
185.320	Pittards leather	Medium size
185.321	Pittards leather	Large size
185.322	Pittards leather	X Large size

© Van Gestel C&B 1997

The original flying jackets

RAF IRVIN

Top quality, supple sheepskin with long rugged wool especially prepared for "IRVIN" jackets. Brown sheepskin with brown leather binding. The inside wool colour in warm honey. Zips are made from heavy duty brass. Belt buckle is made from solid cast brass. Each jacket has the unique "IRVIN" woven lable sewn inside, guarranteeing that it is an official "IRVIN"jacket. Made in England. Do not forget to wear the clothing that you will wear under your original IRVIN jacket at the moment of taking sizes!

Part Number			A	B	C	D
MEN	**199.001**	Regular	101	67	60	168->180
	199.002	Regular	107	67	61	168->180
	199.003	Regular	112	68.5	61	168->180
	199.004	Regular	117	68.5	62	168->180
	199.005	Regular	122	70	63.5	168->180
	199.006	Long	101	72	63.5	180->188
	199.007	Long	107	72	64.7	180->188
	199.008	Long	112	74	64.7	180->188
	199.009	Long	117	74	66	180->188
	199.010	Long	122	75	66	180->188
LADIES	**199.011**	Size 10	86	62	54.5	157->173
	199.012	Size 12	91	63.5	54.5	157->173
	199.013	Size 14	96	63.5	56	157->173
	199.014	Size 16	101	63.5	56	157->173

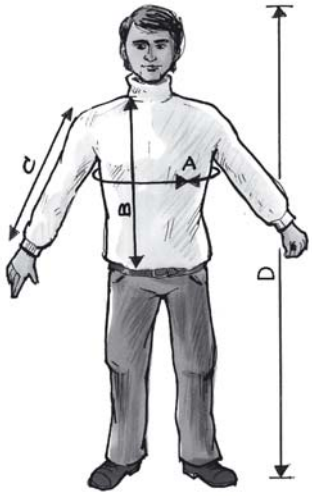

185.017
"Brooklands Aeroscreen"
Period style aeroscreen with polished aluminium frame, chrome fittings & safety glass screen.

185.197
Austin Healey
Parking only
320 X 480 mm

185.199
UNION jack flag
70 x 100 cm

185.196
MG Parking only
320 X 480 mm

© Van Gestel C&B 1997

Luggage racks

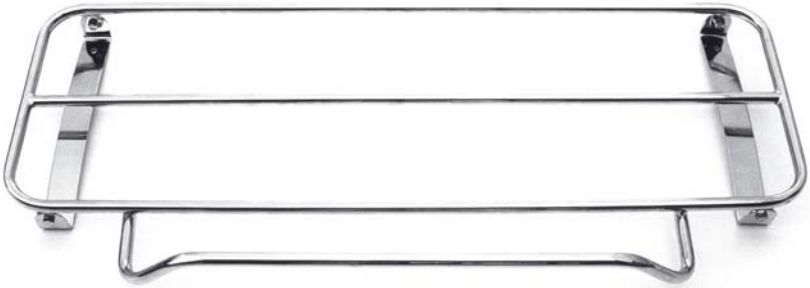

140.281
Sprite MKI '58-'61 chrome plated luggage rack
fixing hole distances: 87.5 cm x 25 cm

140.099
Original Sprite & Midget '61-'80 chrome plated luggage rack
fixing hole distances: 46 cm x 28.5 cm

140.066
Clamp-onuniversal luggage rack
Clamp-on suction pads, no drilling holes

140.378
Sprite & Midget '61-'80 deluxe chrome plated luggage rack with buckels
fixing hole distances: 48.3 cm x 40.5 cm

140.375
Universal chrome plated luggage rack with buckels
fixing hole distances: 60.5 cm x 43.5 cm

© Van Gestel C&B 1997

Mirrors

141.844
Lightweight aluminium racing mirror
Made in England by the manufacturer who made the originals used in British sports cars between 1950 & 1970.

141.852
Round clamp-on mirror
no drilling holes, clamps on windscreen
(sold per piece)

141.192
Classic clamp-on mirror
no drilling holes, clamps on windscreen

141.930
pair wing mirrors
(incl. all pieces as seen on photo)

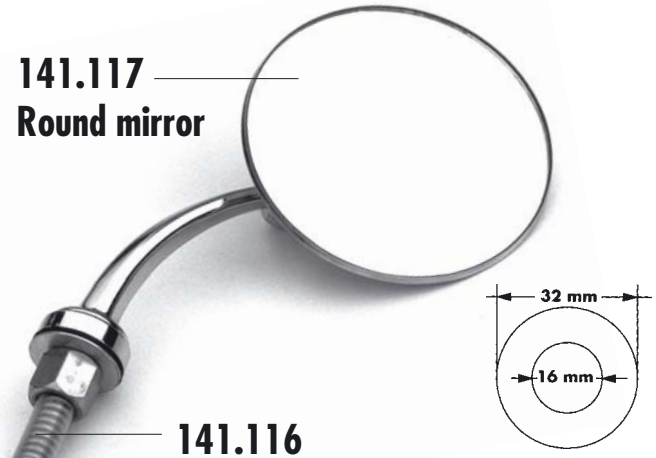

141.117
Round mirror

141.116
RH or LH mirror arm on spring

141.011 RH wing mirror • LH door mirror
141.012 LH wing mirror • RH door mirror
(incl. all pieces as seen on photo)

122.072
Seal, mirror arm to wing

141.070
Racing mirror
(incl. all pieces as seen on photo)

© Van Gestel C&B 1997

Badges & mirrors

185.154
Chrome plated "GB" letters
Quality chrome plated solid metal letters.
The "B" for Belgium can be used separately.

085.158
Chrome plated "RAC" badge
This high quality original "RAC" badge will give your car it's finishing touch.

185.630
High quality BMC badge
Very nicely finished in chrome & jeweller's enamel.

085.096
Saint Christopher Badge
With British flag. Very authentic, fine detailed chrome plated badge with U.J. laid in jeweller's enamel.

185.519
Chrome plated A.H. Badge
For your car, as a present, souvenir or award.

185.170
Chrome plated MG Badge
For your car, as a present, souvenir or award.

185.169
Chrome plated U.J. Badge
For your car, as a present, souvenir or award.

185.049
Steel badge clamp, fits on badge bar

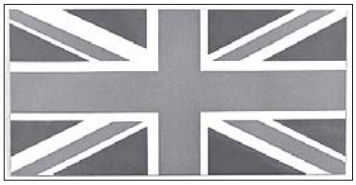

085.157
Union Jack sticker
For your car or as decoration & souvenir.
measurements: 73 x 43 mm

185.002
Union Jack badge
Chrome with jeweller's enamel
A masterpiece for your car.
162.405 chrome plated screw (pan pozi)
161.054 nut

133.834
Strong s/s fixing plate
Essential for your badges
162.312 chrome plated screw
161.047 nylock nut

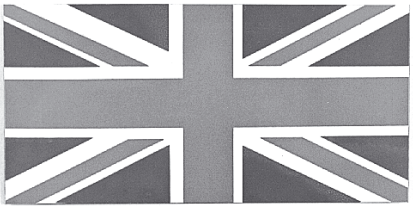

085.149
Magnetic Union Jack
For your car or as decoration & souvenir.
measurements: 90 x 55 mm

185.174
Union Jack sew-on patch
Essential for your jacket, strong & good quality material.

© Van Gestel C&B 1997

Key fobs, patches, pins & sign boards

Key fobs

185.202
Key fob
"Austin Healey"

185.211
Key fob
"BMC" rosette

185.210
Key fob
"Union Jack"

185.006
Key fob
"MG"

Patches

185.295 Patch "MG" brown & cream
185.173 Patch "MG" Red & black

185.200
Patch "Austin Sprite" black, white & red

185.488 Patch "Austin Healey" Red & silver

185.174
Patch
"Union Jack"

Badges & pins

185.219
"Union jack" on pin

185.188
"MG" on pin

185.184
"Austin Healey" on pin

Quality mugs

185.645 Midget
185.646 Sprite

Sign boards

These boards look so authentic you can't tell the difference. Perfect for decoration in your home, office and of course your garage.

185.636
"MG" sign board in brown and cream

185.485 "Austin Healey" plate, Multi coloured, 70 x 25 cm

Screen printed sign boards

Reproductions of the period dealership signs.
Multi coloured superbly screen printed. Perfect for decoration in your home, office and of course your garage.

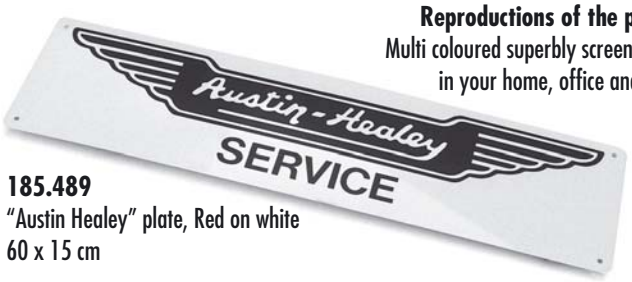

185.489
"Austin Healey" plate, Red on white
60 x 15 cm

185.490
"BMC" plate,multi-coloured
68 x 45 cm

© Van Gestel C&B 1997

Tools

102.302
SU tool kit
3 pieces

102.217 SU tool
Jet adjusting spanner

200.573
A set of tools to tune your SU.
This kit includes a mixture test gauge, rods to set the float level, jet wrench, a jet centering tool and instructions.

200.739
SU Box
Spanner for needle & seat

200.572
Carburettor synchronizer

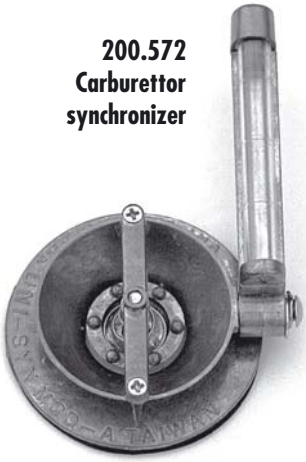

200.706
Reamer for swivel bushes

200.740 Carburettor synchronizer

200.679
Pair of "Midlock" carburettor testers
Comes complete with a universal adaptor

"Midlock" Adaptor
200.680: SU 1" 1/4
200.681: SU 1" 1/2

200.750
Exhaust gas analyzer
Tune your engine to peak performance with this quality gas analyzer

200.748
Colortune from Gunson
With it's glass top spark plug you can observe the colour of the combustion in the chamber

© Van Gestel C&B 1997

Screw kits

Set of screws & nuts
152.110
Set of 20 pieces: 10 screws & 10 nuts

Screw set, 3/16
162.507
Set of 40 pieces: 10 screws, 10 nuts,
10 plain washers & 10 spring washers

Set of chrome panel screws & cups
152.049
Set of 120 pieces: 60 screws & 60 cups

Set of black panel screws & cups
162.156
Set of 50 pieces: 25 screws & 25 cups

Screw set, 5/16 UNF
162.762
Set of 40 pieces: 10 screws, 10 nuts,
10 plain washers & 10 spring washers

Screw set, UNF 3/16", 1/4", 5/16"
135.629
Set of 160 pieces: 40 screws, 40 nuts, 40 plain
washers & 40 spring washers

© Van Gestel C&B 1997

Tools

200.419
Revolving punch pliers

185.019
Punch & bed kit

200.665
Bezel nut remover: A slatted
Made to fit the 3/4″ & 7/8″ diameter nuts. Will save your dashboard from scratches

200.391 Car circuit tester
Especially for car electrice. Comes with pointed probe, cap cover, connecting lead & alligator clip

133.141
Octagonal spanner

042.097
Hammer (1.15 Kg)
Made from copper & rawhide

200.702 Tyre pressure gauge
Made from solid brass

136.055 British wheel wrench
This is a superior tool when it comes to removing spinners

185.050
Wire wheel brush

136.056 British wheel wrench
This is a superior tool when it comes to removing octagonal spinners

200.674
Spoke spanner tool

159.059
Protective cover for spinner wrenches

200.440
Workshop Verniercaliper
As per DIN 862, stainless steel verneer readings 1/20mm & 1/128 C/w plastic puch.

200.442
Precision rule
Made from hardended stainless steel with a clear graduation in Inches & cm

132.526
Traditional tyre pump

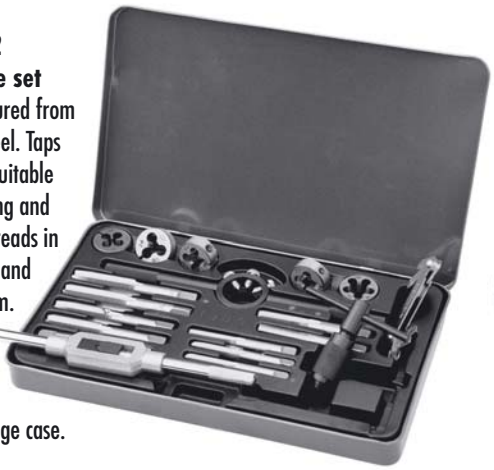

200.712
Tap & die set
Manufactured from carbon steel. Taps and dies suitable for cleaning and cutting threads in mild steel and alluminium.

Contents secured in steel storage case.

Tap wrench adjustable
200.456 Capacity, hand taps 1/8 up to 1/2
200.457 Capacity, hand taps 1/4 up to 3/4

T-type ratchet tapwrench
200.458
Capacity, hand taps 1/8 up to 1/4
200.459
Capacity, hand taps 1/4 up to 1/2

Circular diestocks
200.460 20 mm diameter
200.461 25 mm diameter
200.462 30 mm diameter
200.463 38 mm diameter

200.464 Thread restoring file
This most usefull tool will repair damaged or rusty threads in difficult place.

© Van Gestel C&B 1997

Tools

200.452
Spark plug socket
With insulated
T-handle

200.711
10 blade imperial gauge
Contents: 1 1/2, 2, 3, 4, 6, 8, 10, 12, 15 and 25 thousand. 4" long taper blades hardened and polished for long life.

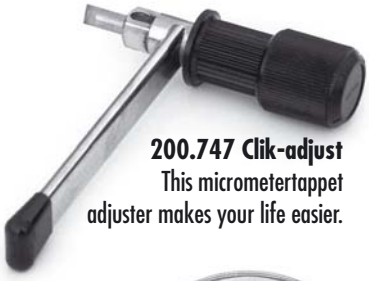

200.747 Clik-adjust
This micrometertappet adjuster makes your life easier.

200.446
Valve spring lifter

200.449
Valve grinding paste

200.448
Valve grinding stick

200.447
Valve adaptor
Holds valves up with pressed air

200.652 LUCAS
distributor screwdriver,
Feeler for contact points
& spark plug adjusting.

011.197
Bracket for lifting the engine

200.450
Piston ring compressor
Made of spring steel,
stepless adjustment
C/W hex. key wrench

200.390
Oil service spanner

200.453
Oil filter remover

200.615
Clutch centering tool

200.438
Universal ball joint seperator

053.176 Vizibleed bleeder
Easy bleeding of brakes & clutch

200.707
Circlip fitting tool
For installing the impossible
E clip on the rear wheel cylinder

200.126 Spanner
Double ended open
ring spanner
5/16 x 3/8

052.339
Brake adjusting tool

200.737 Bending tool
The best tool for bending
your brake pipe set etc.

200.746
Easy Bleed
Makes bleeding
easy without any
pedal pumping. Uses
your tyre pressure to
bleed brakes, clutch etc.

© Van Gestel C&B 1997

Tools

200.145 1/4 socket set
High quality, extra strong tools from Germany.
Contents: 10 hexagon sockets, drive handle, sliding 'T' handle, extension bar, universal joint and ratchet lever.

200.002
High quality open spanner set
1/4" to 1 1/4"
8 pieces

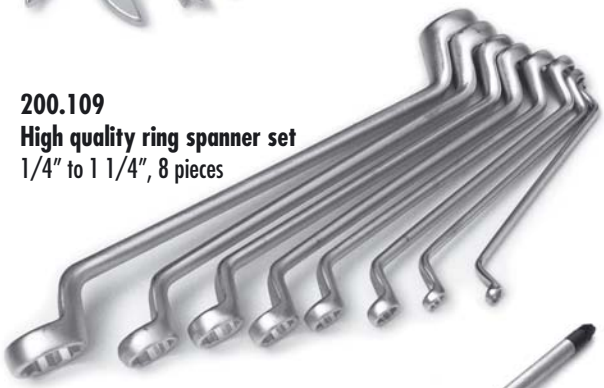

200.109
High quality ring spanner set
1/4" to 1 1/4", 8 pieces

200.047
High quality combination spanners
7/16" to 7/8", 10 pieces

POZIDRIV
Chrome alloy steel screwdrivers
200.350 N°0
200.351 N°1
200.352 N°2
200.353 N°3
200.354 N°4

200.410 Circlip pliers
Pliers for inside, circlip size from 8 to 25 mm

200.412 Circlip pliers
Pliers for inside with 90° tips, circlip size from 8 to 25 mm

200.588
High quality robust rivet tool

200.414 Circlip pliers
Pliers for outside, circlip size from 10 to 25 mm

200.416 Circlip pliers
Pliers for outside with 90° tips, circlip size from 10 to 25 mm

200.434 Spotwell mill
With interchangeable mill (10 mm dia.) & adjustable mill depth

200.435 Spare mill

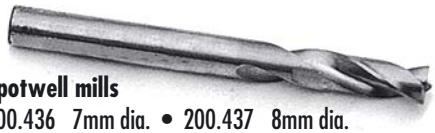

Spotwell mills
200.436 7mm dia. • 200.437 8mm dia.

© Van Gestel C&B 1997

Plates & stickers

085.018 "MG" rocker cover plate

085.082 "LUCAS" coil sticker

085.041 "LUCAS" sticker strip for wiring system

085.044 "AUSTIN" rocker cover plate

085.026 "CAUTION" plate

085.019 Patents plate, rocker cover

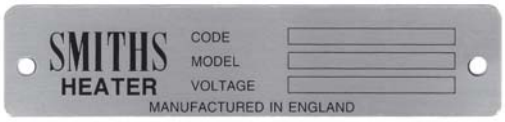

085.025 "SMITHS" heater plate

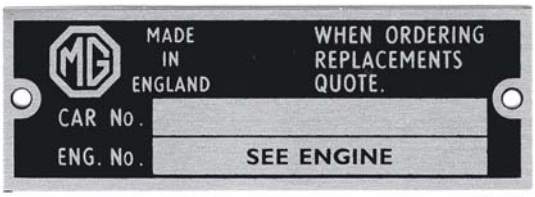

085.058 "MG MIDGET" chassis plate

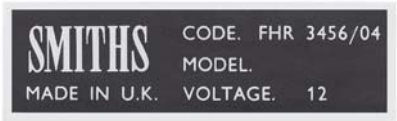

085.006 "SMITHS" heater motor sticker

085.036 "COOPERS" air filter sticker

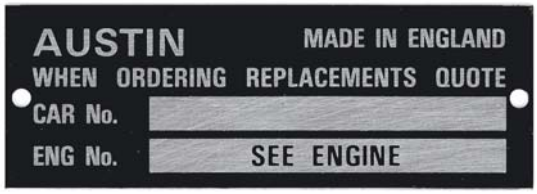

085.063 "AUSTIN SPRITE" chassis plate

152.109
Stud set
10 pieces

for rocker cover, chassis plates etc.

085.080 "TRIPLEX LAMINATED" sticker

185.002
Union Jack, jeweler's enamel on chrome

162.405
chrome plated screw

161.054
nut

BMC sticker
085.085 on screen
085.086 on body

© Van Gestel C&B 1997

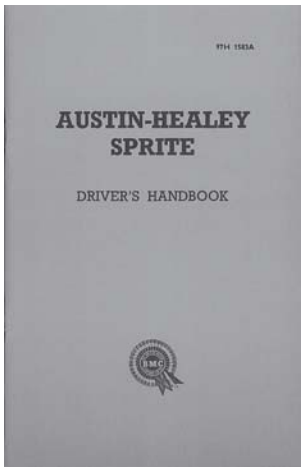

190.503
Drivers handbook
As supplied with all new cars
Detailed information, for practical use. shows you how to put up soft top, lubrication information and routine maintenance

Factory workshop manuals
Reprints of the original workshop manuals as supplied to all official BMC dealers.
These books are complete and very detailed. Buy this for yourself or for your garage holder, it will save time and money.

190.501	Sprite MKI	English
190.502	Sprite MKII-III-IV	English
190.240	Sprite & Midget '64-67	French
190.156	Sprite & Midget '58-'80	English (pocket size)

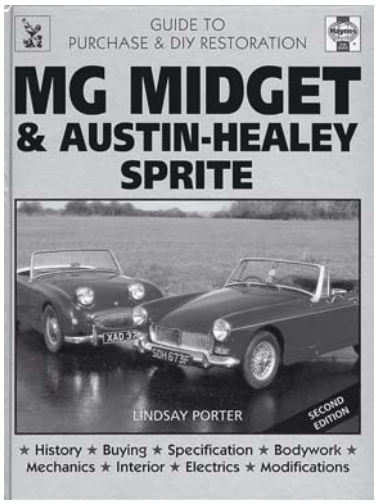

190.045
Restoration guide
Lindsay Porter
This book covers not only the usual mechanical repairs, but also includes body repair, trim fitting information and all details for a full restoration job.

190.418
How to power tune Midget & Sprite
by Daniel Stapleton
Covers all Midgets & Sprites. Details on modifications to the whole car for better performance, handling and braking. Very usefull for fast road, rally and race. 153 pages, all illustrated.

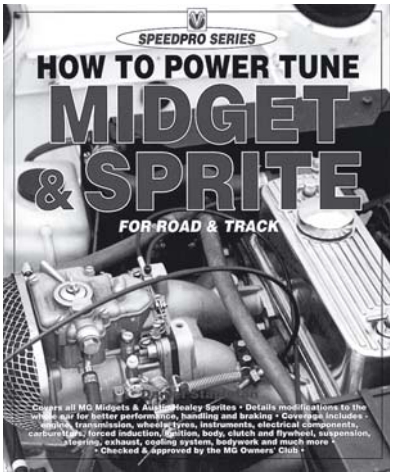

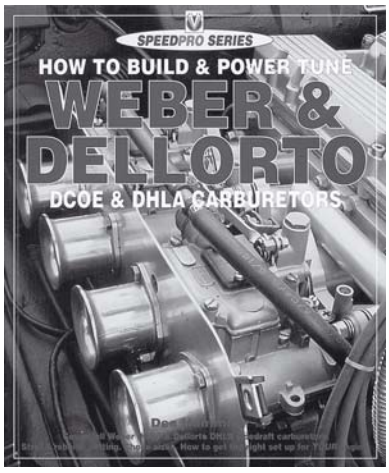

190.416
WEBER & DELLORTO
How to build & power tune WEBER & DELLORTO DCOE & DHLA carburetters
All you could want to know about the world's most famous and popular side-draught carburetors. Strip & rebuild, tuning, jetting, choke sizes and an application formula gives the right set-up for your MG. 96 pages, over 100 photographs and line illustrations.

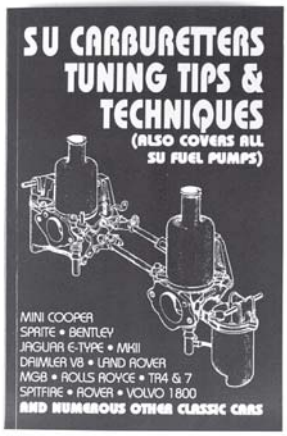

190.225
SU CARBURETTERS TUNING TIPS & TECHNIQUES
Most mechanics and enthusiasts struggle with setting the twin SU carburetters correctly. This book and a bit of practice will solve the problem. It is very important for your engine that the carburettor tuning is correct. This book also covers all SU Fuel pumps.

190.428
HAYNES TECHBOOK: WEBER, STROMBERG & SU CARBURETTORS
This is one of the most complete books on carburettors. Theory & operation is explained in great detail with photo's & illustrations. With detailed overhaul procedures, maintenance and tune-up info. Also with application & reference tables .

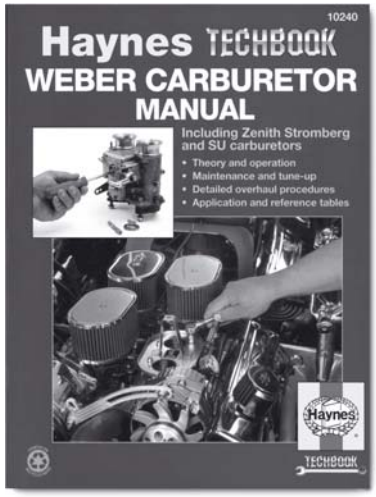

© Van Gestel C&B 1997

Original series

For correct and precise information on definitive factory specififcations in every detail, from chrome trim to plug leads, there's no better place to look than these books. Whether owner, buyer, restorer or enthusiast, you'll find a combination of minutely researched text and magnificent full-colour photographs - all specially commissioned - to tell you what you need to know. Hailed by magazine reviewers worldwide. The 'Original' series is the works.

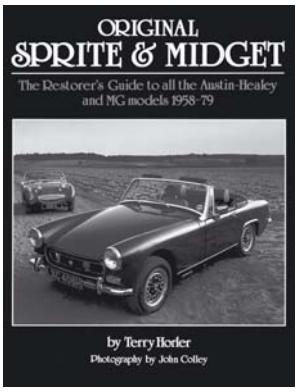

190.220 Sprite & Midget

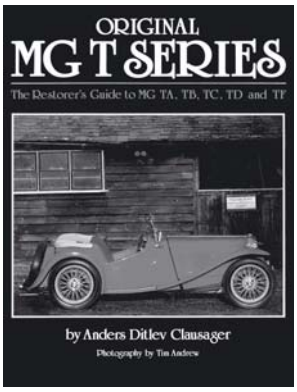

190.057 MG T series

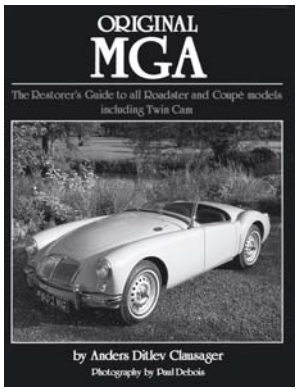

190.175 MGA

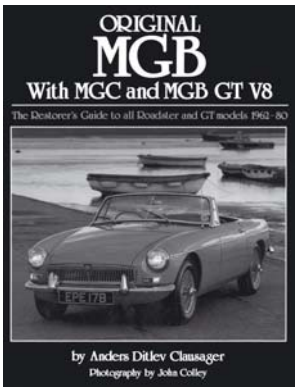

190.223 MGB & MGC

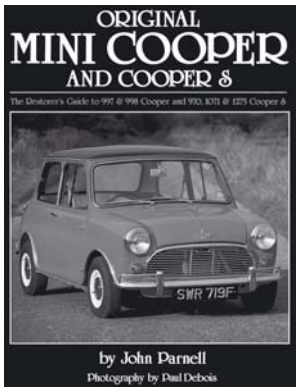

190.198 Mini Cooper & Cooper S

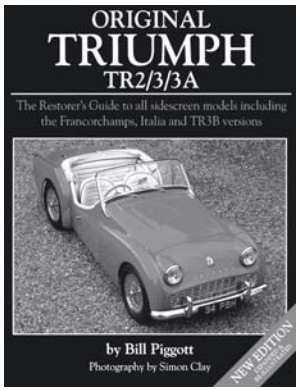

190.527 Triumph TR2-3A

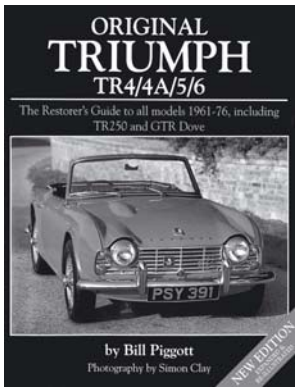

190.536 Triumph TR4-6

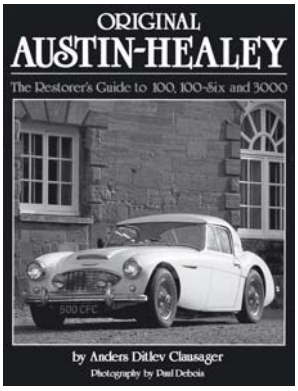

190.193 Austin-Healey

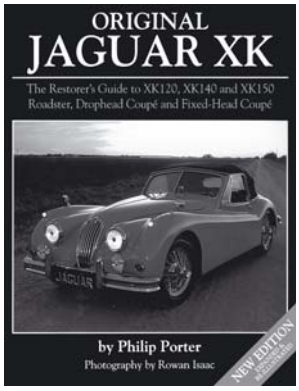

190.560 Jaguar XK

190.561 Jaguar E-type

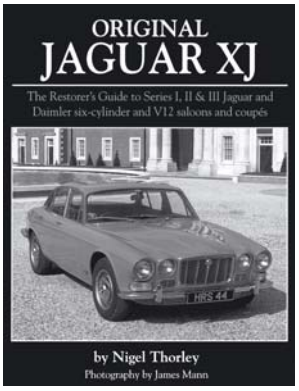

190.562 Jaguar XJ

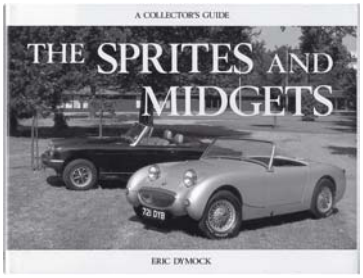

190.137
A.H. Sprite & MG Midget
by Graham Robson
History books, model by model including prototypes, production tables, changes by chassis number and date. Competition history and production information. How the difference between models grew. Excellent writing with unique illustrations. 136 pages all illustrated.

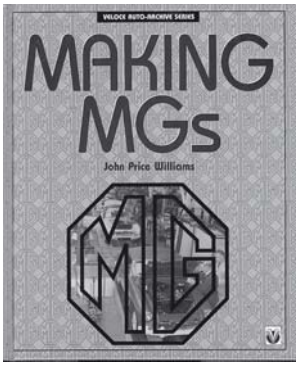

190.419
MAKING MG's
by Price Williams
Very nice book about MG production. Plenty of authentic photos illustrating the factory life and the MG assembly line. This book will give you correct information, how cars left the factory; sometimes half built for export, sometimes with body paint repair etc.

190.414
Sprites & Midgets, the complete story
by Anders Ditlev Clausager
Complete history of all forms of 'Spridgets'. Detailed driving impressions and road test results. Over 200 superb colour and B/W photography. In-depth technical specifications and comparisons. Information on buying, restoring, and maintaining. This is the definitive guide and essential reading for all classic car enthusiasts. Hard cover, 225 pages

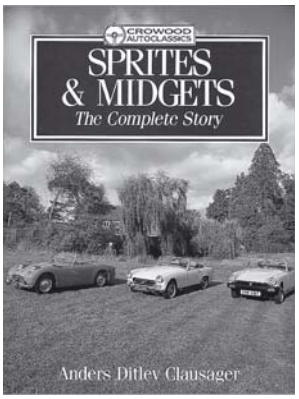

© Van Gestel C&B 1997

Colours & codes

We list the Sprite & Midget colours and the paint manufacturers codes. To avoid any misunderstandings, please note that this is for informationonly and that we strongly recommend that you buy a tester (spray) first. Not all colours listed below are available, please refer to your price-list for more information on availability.

Paints, thinners & paint based substances.

Colour name & discription	Years used	Factory code	Spray 400 ml	Tin 1 L.
1/2 L. hardener for acrillic paint				186.090
Thinner for acrillic paint				186.091
Primer for metal			187.013	186.092
Primer for aluminium			187.014	186.093
Primer for plastic			187.015	186.094
Whitehall (beige)	58-61 Sprite	BG.4	187.108	
Black	61-64 all	BK.1	187.016	
Clipper blue	61-62 Midget	BU.14	187.109	
Ice blue	62-64 Midget	BU.18	187.110	
Iris blue	58-64 Sprite	BU.12	187.061	186.141
Speedwell blue	58-62 Sprite	BU.1	187.111	
Almond green	61-62 Midget	GN.37	187.112	
British racing green	62-64 all	GN.25	187.050	186.130
Dark green	58-61 Sprite	GN.12	187.113	
Leaf green	58-61 Sprite	GN.15	187.114	
Dove grey	61-62 Midget 62-64 all	GR.26	187.021	186.101
Farina grey	61-62 Midget	GR.11	187.115	
Cherry red	58-61 Sprite	RD.4	187.116	
Deep pink	61-62 Sprite	RD.18	187.117	
Signal red	62-64 Sprite	RD.2	187.118	
Tartan red	61-64 Midget	RD.9	187.040	186.120
Old English white	58-64 all	WT.3	187.017	186.097
Primrose yellow	58-61 Sprite	YL.3	187.119	
Fiesta yellow	62-64 Sprite	YL.11	187.120	
Highway yellow	62-64 Sprite	YL.9	187.121	
Engine, grassy green	58-64 all engine & gearbox		187.107	
Fan & pulley, yellow	58-64		187.066	
Wheels, silver colour	58-64		187.004	
Tudor, blue	58-64 Bottle bracket		187.067	
Hood frame, beige	58- early		187.006	
Hood frame, grey	?-late		187.068	

186.087
WAX OIL Anti-Corrosion
2.5L Starter kit

186.080
400ml Spray

186.084
2.5 L. Wax Oil

186.151
"Fertan"
rust killer
Pumpspray, 340ml

© Van Gestel C&B 1997

How to read & use the part number lists

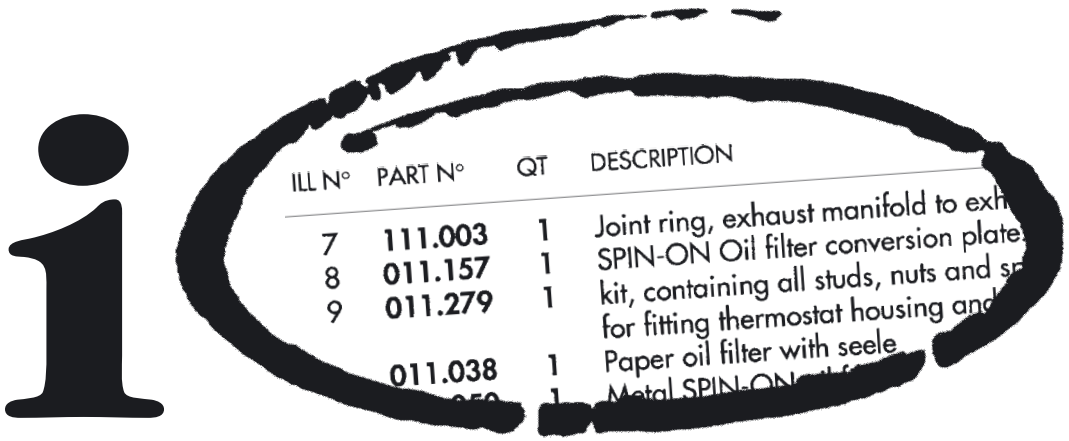

GB **ILL n°.** Illustration number	**PART n°.** Part number	**QTY.** quantity required	**DESCRIPTION** Part description
Illustration number Exceptions: If a part has no illustration number it is because there are several kinds of the part in question. *e.g. Left and right hand door panel.*	**Part number** Exceptions: A part number may be missing if the part is no longer obtainable or in production.	**Necessary quantity:** **ATTENTION:** indicated here is the quantity of units necessary and **not** the quantity of units which are supplied per order/delivery. Our parts are sold per unit.	**Part description** With dimensions of screws, bolts, cables, etc. Information about carburetters, electricity etc., details about books giving more information about the part itself: original, reproduction, reconditioned, etc.
NL **Illustratie nummer** Uitzonderingen: Een onderdeel heeft geen Illustratie nr. omdat er meerdere soorten van het bestaande stuk zijn. *vb. Links en rechts deurpaneel*	**Onderdeelnummer** Uitzonderingen: Een onderdeelnummer kan onbreken waarneer dit stuk niet meer te verkrijgen of in produktie is.	**Nodige Hoeveelheid** **LET OP:** Hier wordt de hoeveelheid stuks die nodig zijn vermeld en **niet** de hoeveelheid stuks die worden geleverd bij bestellingen. Onze onderdelen worden verkocht per stuk.	**Onderdeel beschrijving** Met maten van schroeven, bouten, kabels enz. Informatie over carburateurs, elektriciteit enz. Details over boeken die meer informatie geven. Informatie over het onderdeel zelf: origineel, reproduktie, gerestaureerd enz.
F **Numéro illustration** Exceptions: Si une pièce détachée ne comporte pas de numéro d'illustration, c'est que la pièce existe en plusieurs versions. *Exemple: Panneau de porte gauche - droite.*	**Numéro de la pièce** Exceptions: Si ce numéro n'est pas indiqué, c'est parce que cette pièce n'est plus disponible ou qu'elle n'est plus en production.	**Quantité nécessaire:** **ATTENTION:** Sous cette rubrique, on mentionne la quantité de pièces qu'il faut et **non** la quantité de pièces livrées lors de la commande. Nos pièces détachées se vendent à l'unité.	**Description de la pièce:** Comporte les dimensions des vis, écrous, câbles etc. Des reseignements au sujet de carburateurs, électricité etc., des détails concernant des livres informatifs. Des renseignements au sujet de la pièce même: pièce d'origine, reproduction, pièce révisée etc.
D **Abbildungsnummer:** Ausnahmefall: Wenn ein Einzelteil keine Abbildungsnummer hat, ist das, weil der Einzelteil in mehreren Fassungen besteht. *Beispiel: Linke - rechte Türfläche.*	**Nummer des Ersatzteils:** Ausnahmefall: Mangelt diese Nummer, dann ist dieser Einzelteil nicht mehr verfügbar oder wird er nicht mehr hergestellt.	**Benötigte Menge:** **Achtung!** Unter diesem Titel wird die Menge der benötigten Einzelteile angegeben, sondern **nicht** die Menge der bei Bestellungen gelieferten Einzelteile. Unsere Einzelteile werden stückweise verkauft.	**Beschreibung des Ersatzteils** Betrifft die Abmessungen der Schrauben, Mutter, Kabel, usw.; Auskünfte über Vergaser, Elektrizität, usw. Einzelheiten über Info-Bücher, Auskünfte über den Einzelteil selbst: Originaleinzelteil, Reproduction, überholter Einzelteil usw.
I **Numero illustrazione** Eccezioni: Un componente non ha un numero illustrazione perchè ci sono vari tipi del pezzo esistente. *P. es. Pannello porta destro e sinistro.*	**Numero componente** Eccezioni: Può succedere che non c'è un numero componente quando il pezzo non è più disponibile o quando non è più in produzione.	**Quantità necessaria** **AVVERTENZA**: La quantità di pezzi necessari è data, e **non** la quantità di pezzi consegnati dopo ordinazioni. I nostri componenti vengono venduti al pezzo.	**Descrizioni componenti** Con misure di vite, bulloni, cavi ecc. Informazione su carburatori, elettricità ecc. dettagli su libri che danno ulteriore informazione. Informazione sul componente stesso: originale, riproduzione, revisionato ecc.

© Van Gestel C&B 1997

MGTC - TD - TF - MGA - MGB - MG Midget - MGC - MGF - Triumph Spitfire - Triumph TR2 - 3 - 3A - 4 - 4A - 5 - 250 - 6

Austin Healey 100/4 - 100/6 - 3000 and Sprite - Mini - Morris Minor - Land Rover Defender - Jaguar XK120 - 140 - 150 - Jaguar E-Type - Jaguar MKII - Jaguar XJ

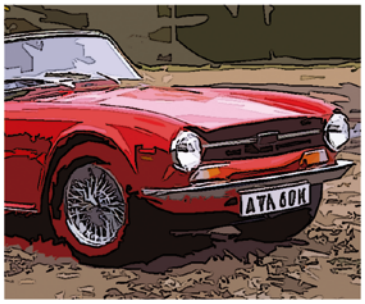

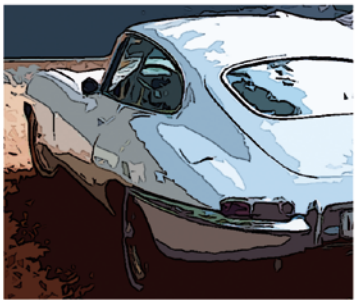

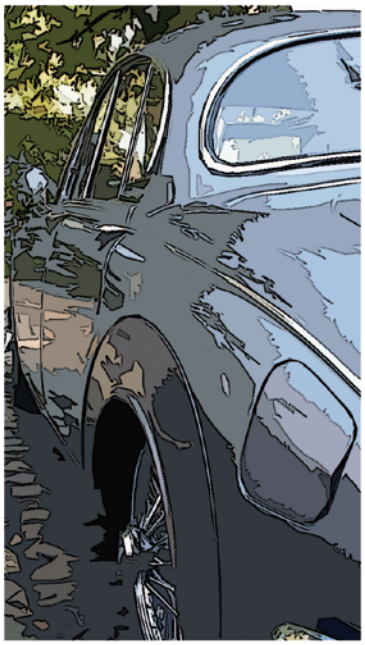

There's no easier way!

angloparts.com

All the parts, all the information and all our free PDF catalogues at your fingertips.

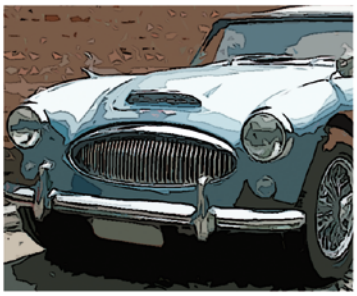

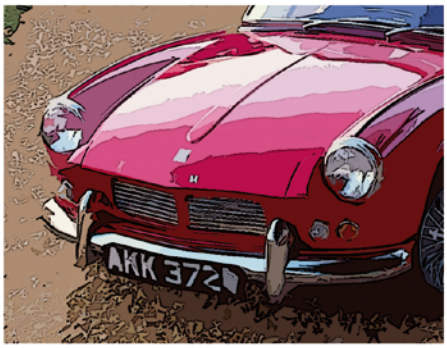

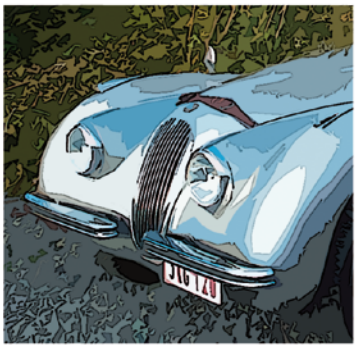

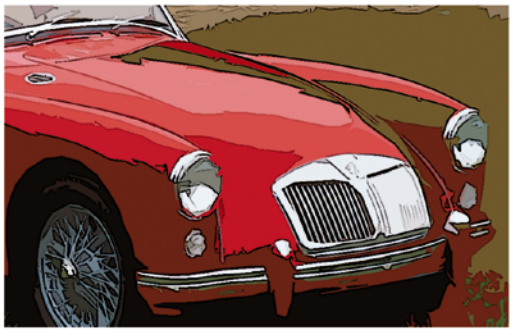

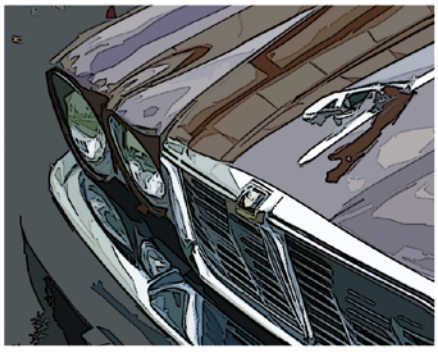

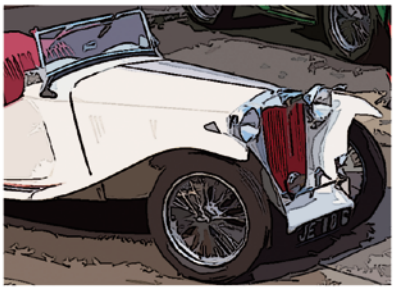

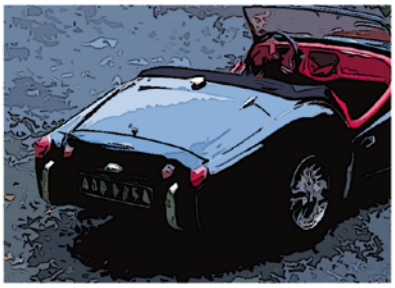

Jaguar XK120 - 140 - 150 - Jaguar E-Type - Jaguar MKII - Jaguar XJ - Mini - Morris Minor - Land Rover Defender

Wire wheel balancing

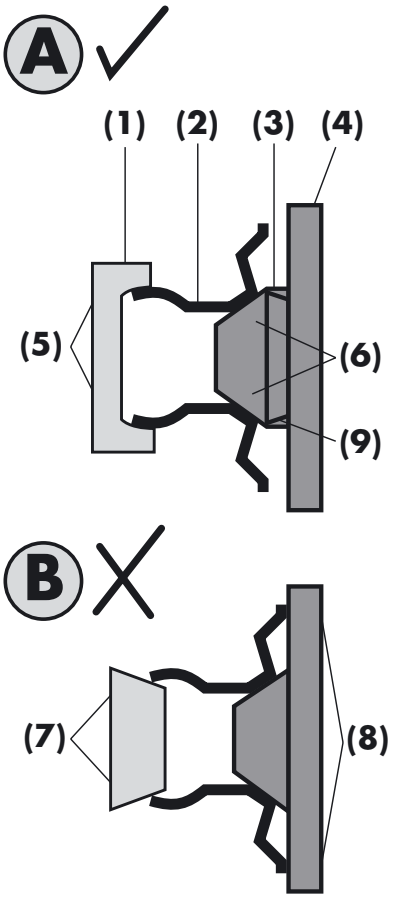

GB

How to balance centre lock wire wheels

The diagrams show the centre spline of a wire wheel attatched to a balancer.
Diagram A is the correct method of locating the wheel.
Diagram B shows the wrong method.

(1) Balancer lock nut
(2) Splined hub
(3) Sprung cone
(4) Mounting face of balancer
(5) Locate only at these external points
(6) Locate only at these points
(7) Do not locate at these internal points
(8) Do not locate at these points
(9) Inner cone with distance piece

POINTS TO CHECK
The original high degree of balance may be affected by wheel damage as well as by factors related to the tyres uneven tread wear, cover or tube repairs etc. If roughness or high speed steering trouble develop, and this cause is not disclosed by mechanical investigation, then the complete tyre and wheel assembly should be checked for balance.

It is **IMPERITIVE** that the hubs are located on the balancing machine in exactly the same manner as located on the car and the factory truing jigs. Alternatively, balance on the vehicle, this operation can only be done on the front wheels of your car.

D

Das Auswuchten von Speichen- rädern mit zentral Verschluss.

Die abbildungen zeigen die Nabe eines ZV-Speichen-rades auf einer Auswuchtmaschine montiert.
Abbildung A: Die richtige Montage. (Nabenteller berührungsfrei, außen sitzender Außenkonus) .
Abbildung B: Hier ist die Nabe falsch montiert!

(1) Außen übergreifender Wuchtkonus
(2) Speicherad-Nabe
(3) Innenkonus mit Distanzstück "i"
(4) Anlageplatte der Wuchtmaschine
(5) Hier über Original-Außenkonus spannen
(6) Hier über Original-Innenkonus spannen
(7) Nicht über Innenkonus führen
(8) Der Nabenteller darf die Anlageplatte nicht berühen!
(9) Distanzstück, zur Verhinderung von Punkt "H"

Überprüfungspunkte: (Hinweise)
der ursprünglich gute Rundlauf eines Rades kann sowohl durch eine Beschädigung des Rades als auch durch unleichmäßige Reifenabnutzung, Schlauchreparaturen oder ungenau gefertigte Neureifen etc. beeinträchtigt werden. Wenn vibrationen auftreten, deren Ursache nicht zweifelsfrei in der Mechanik liegen, solte das komplette Rad mit reifen ausgewuchtet werden.

Es ist absolut unumgänglich, dab die Râder auf der Wuchtmaschine genauso gespannt werden wie am Wagen selbst. Bei Bedarf sind die erforderlichen Spannwerkzeuge über MWS zu bezichen. Alternativ ist es möglich, die Räder elektronisch am Wagen zu wuchten, was jedoch nur an nicht angetriebenen Achsen möglich ist.

F

COMMENT EQUILIBRER DES ROUES A RAYONS

Le dessin montre le moyeu d'une roue fixée sur une équilibreuse.
LE SCHEMA A indique la méthode de fixation correcte.
LE SCHEMA B indique une fixation incorrecte.

(1) Equilibreuse, écrou de vérouillage
(2) Moyeux
(3) Cone ressort
(4) Montage Avant de l'équilibreuse
(5) Placer seulement sur ces points exterieurs
(6) Placer seulement sur ces points
(7) Ne pas placer sur ces points interieurs
(8) Ne pas placer sur ces points
(9) ecartement afin d'éviter le contact sur point

LES POINTS A OBSERVER ET VERIFIER:
La précision de l'équilibrage peut être affectée par une jante détériorée aussi bien que par des pneus usés ou des tubeless reparés, etc. Si la direction devient dure ou représente des troubles à grande vitesse, et, où après verification, la cause n'est pas mécanique, il convient de verifier l'équilibrage de la roue.
IL EST IMPERATIF de respecter le **schema A** lors de l'installation sur l'équilibreuse. On peut aussi équilibrer les roues avants seulement sur le vehicule, à l'aide d'un appareil adapte. Pour tous renseignements complementaires n'hésitez pas à contacter.

NL

Het uitbalanceren van een "centre lock" spaakvelg

Illustraties:
SCHEMA A Dit is de juiste wijze van balanceren.
SCHEMA B Op deze foute wijze krijgt men afwijkende meet gegevens.

(1) Balanceer moer
(2) Spaakvelg
(3) Binnencone met afstandstuk
(4) Montage plaat van balanceer apparaat
(5) Centreren op deze binnenste punten
(6) Op deze punten centreren
(7) Niet centreren op deze binnenste punten
(8) Niet op deze punten centreren
(9) Binnencone met afstandstuk

Belangerijk is de wijze waarop de spaakvelg op het balanceer apparaat opgespannen wordt. Zie illustratie A en B.
In verband met de garantie wordt aanbevolen de spaakvelg zonder band op het balanceer apparaat op te spannen en na te zien of de velg in balans is. De afwijking wordt gemeten vanaf de rand waar de band tegen komt te liggen met maximaal 2 millimeter afwijking. Als deze afwijking minder is, dan kan de band op de spaakvelg gemonteerd worden en het geheel uitgebalanceerd worden.

I

COME BILANCIARE RUOTE A RAGGI

Il disegno mostra il mozzo d'una ruota fissata su una macchina da bilanciare.
LO SCHEMA A indica il metodo corretto di fissare una ruota.
LO SCHEMA B mostra il metodo scorretto !

(1) Un dado di fermo
(2) Mozzo
(3) Pezzo conico sporgente
(4) Disco di montaggio della macchina da bilanciare
(5) Mettere soltanto sui punti esteriori
(6) Mettere soltanto su questi punti
(7) Non mettere su questi punti interiori
(8) Non mettere su questi punti
(9) Separazione per evitare il contatto con il punto

La precisione del bilanciare diventa meno sicura a causa di un cerchione danneggiato, di pneumatici usati o di gomme riparate, etc.
Se la conduzione diventa difficile o presenta dei problemi a grande velocità e, doppo la verifica mecanica, la causa non è questa, è necessario verificare il bilanciare della ruota.
È necessario rispettare lo schema A durante l'instalazione sulla macchina da bilanciare. Si può bilanciare soltanto le ruote anteriori sulla macchina, per mettere di un apparecchio adatto.

© Van Gestel C&B 1997

DOWNLOAD OUR OTHER ANGLO PARTS & ACCESSORIES CATALOGUES FOR FREE!

download the pdf versions of our catalogues for free at www.angloparts.com or buy them for 8 euros a piece.

MGTC
part n° 190.275

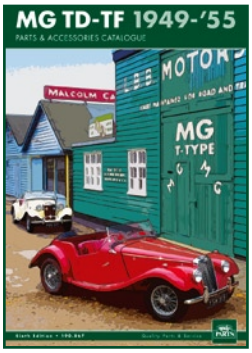

MGTD-TF
part n° 190.067

MGA
part n° 190.001

MGB
part n° 190.002

MGC 1967-69
part n° 190.158

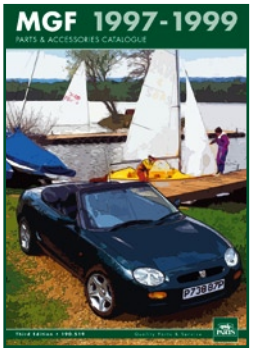

MGF
part n° 190.519

Sprite-Midget 1958-'64
part n° 190.504

Sprite-Midget 1965-'80
part n° 190.518

A.H. 100/4-3000 1953-68
part n° 190.509

British Parts, Tools & Accessories
part n° 190.058

Land Rover Defender 90-110 1984-2006
part n° 190.779

Jaguar XK 120-140-150
part n° 190.694

Jaguar MKII 240-340 Daimler V8-V8 250
part n° 190.721

Jaguar E-type 3.8 & 4.2 1961-71
part n° 190.695

Jaguar XJ, Series I, II, III
part n° 190.780

Triumph TR2-4A
part n° 190.243

Triumph TR5-250-6
part n° 190.273

Triumph Spitfire
part n° 190.133

Mini 1969-2000
part n° 190.720

Morris Minor 1956-71
part n° 190.718

© Van Gestel B&C 2009

AH SPRITE - MG MIDGET

SPRITE MKI-II - MIDGET MKI • 1958-1964

PARTS & ACCESSORIES CATALOGUE

www.angloparts.com

Anglo Parts Shops

MAIN BRANCH BELGIUM
Brusselsesteenweg 245 • B-2800 Mechelen • Tel. +32 15 42 37 83 • Fax +32 15 42 34 45 • sales.belgium@angloparts.com
Open: Monday to Friday: from 9.30 hrs. to 17.30 hrs. • Saturday: from 9.30 hrs. to 16.00 hrs.

HOLLAND
Storkstraat 3 (Industrieterrein De Compagnie) • NL-3905 KX Veenendaal • Tel. +31 318-551334 • Fax +31 318-551395 • sales.veenendaal@angloparts.com
Open: Maandag t/m vrijdag: 9.30 uur - 17.30 uur

ITALY
Via Alessandro Volta 2 • I-31050 Villorba (TV) • Tel. +39 0422 321 500 • Fax +39 0422 321 470 • sales.treviso@angloparts.com
Aperto: lunedì - venerdì: 9.30 alle 12.30 e dalle 14.30 alle 18.00

GERMANY
Ernst Befort Str. 2 • D-35578 Wetzlar • Tel. +49 6441 76081 • Fax +49 6441 781336 • sales.wetzlar@angloparts.com
Geöffnet: Montag bis Freitag: 9.30 Uhr. • 17.30 Uhr. Samstag: geschlossen

Authorized Anglo Parts Dealers

FRANCE Distrib.: Guy Grardel
3 bis, Rue des Ecoles • F-59254 Ghyvelde • Tél. +33 328 26 61 00 • Fax +33 328 26 83 73 • grardel@orange.fr
Ouvert: du lundi au vendredi: de 8.00 h. à 18.00 h. • samedi: de 8.00 h. à 17.00 h.

HOLLAND Distrib.: Niessen Restauratie Center
Orionpoort 1 (Industrieterrein 't Hagelkruis) • NL-5971 LZ Grubbenvorst • Tel. +31 77-3661241 • Fax +31 77-3663411 • niessenrestauratiecenter@hetnet.nl
Open : Maandag t/m vrijdag: 8.30 uur - 17.30 uur • Zaterdag: 9.30 uur - 14.00 uur

SPAIN Distrib.: Auto Storica
Calle Josep Pla, 166 • E-8019 Barcelona • Tel. +34 93 221 90 96 • Fax +34 93 225 27 91 • autostorica@autostorica.net
Horarios: Mañanas: 8h00 a 14h00 • Tardes: 15h30 a 19h00

LUXEMBOURG Distrib.: Motor-Service
Zone Industrielle • L-3378 Livange • Tel. +352 518151-810 • Fax +352 518151-820 • info@motor.lu
Ouvert: du lundi au vendredi: de 7.30 h. à 12.30 h. et 13.00 h. à 17.00 h.

HUNGARY Distrib.: NET-GA Kft
Üllői út 621 • H-1182 Budapest • Tel. +36 30-279-0000 • Fax +36 1-291-2827 • sales.budapest@angloparts.hu
Nyitvatartás: H - P: 09.00 - 17.00

POLAND Distrib.: 4x4 Partner SP. Z.O.O.
ul. Bokserska 47 • 02-690 Warszarwa • Tel. +48 22.857.31.63 • Fax +48 22.857.90.26 • info@4x4partner.pl
otwarte od poniedzialku do piatku od 9.00 do 18.00

SWEDEN Distrib.: British Sports Car Center AB
Värmö 5680, 260 21 Billeberga • Tel: +46-46-70 70 32 • Fax: +46-46-70 98 32 • info@bscc.se
Öppettider: Måndag - fredag 9.00-17.00, samt onsdagar till kl 19.00. Lunch 12.00-13.00. Övriga tider endast efter överenskommelse.

CZECH REPUBLIC Distrib.: Metalkov spol. s r.o.
Čechov 367, 258 01 Vlašim • Tel: + 42(0) 317 847337 • Fax: + 42(0) 317 847338 • angloparts@metalkov.cz
Otevřeno: pondělí až pátek 7.00 - 16.00, sobota 8.30 - 11.30